29.13436
In32a
1945

Aircraft PROPELLERS

1945 EDITION

NAVY TRAINING COURSES

AIRCRAFT PROPELLERS

PREPARED BY

STANDARDS AND CURRICULUM DIVISION
TRAINING
BUREAU OF NAVAL PERSONNEL

NAVY TRAINING COURSES
EDITION OF 1945

UNITED STATES
GOVERNMENT PRINTING OFFICE
WASHINGTON : 1945

For sale by the Superintendent of Documen

G 1.13436
Am 38.6
1946

PREFACE

This book is written for the enlisted men of Naval aviation. It is one of a series of books designed to give them the necessary information to perform their aviation duties.

A knowledge of aircraft propellers is of primary importance to Aviation Propeller Mechanics. But Aviation Machinist Mates responsible for general maintenance work and other subdivisions of Aviation Machinist Mates—that is, Aviation Hydraulics Mechanics, Aviation Instrument Mechanics, Aviation Carburetor Mechanics, and Aviation Flight Engineers—all of them can profit by an understanding of why and how aircraft propellers operate. Specialists should not be narrowly limited to their specialties alone. They should know how their jobs relate to other jobs.

Starting with the basic principles of propeller operation, this book discusses the four types of propellers used today in naval aviation. There is information on the two-position controllable pitch propeller, the constant speed propeller, the hydromatic quick-feathering propeller, and the electric propeller. In conclusion, there is a section on trouble shooting—specifically for hydromatic and electric propellers.

As one of the Navy Training Courses, this book represents the joint endeavor of the Naval Air Technical Training Command and the Training Courses Unit of the Bureau of Naval Personnel.

TABLE OF CONTENTS

	Page
Preface	III
CHAPTER 1	
Background for propellers	1
CHAPTER 2	
Two-position controllable-pitch propeller	13
CHAPTER 3	
Constant-speed propeller	41
CHAPTER 4	
Hydromatic quick-feathering propeller	65
CHAPTER 5	
Electric propeller	129
CHAPTER 6	
Trouble-shooting	195

AIRCRAFT PROPELLERS

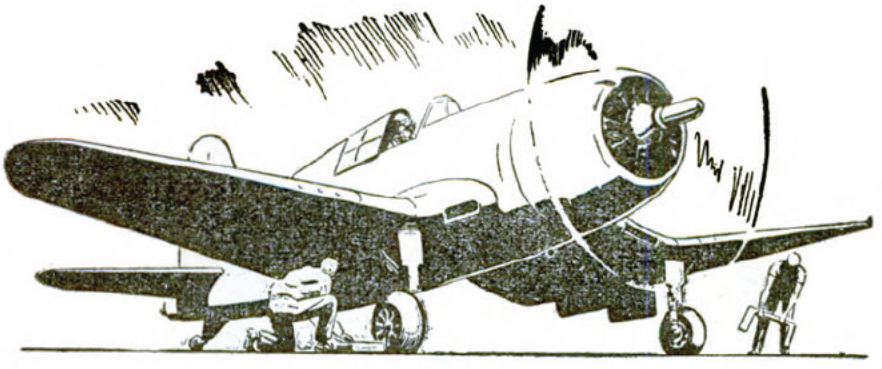

CHAPTER 1

BACKGROUND FOR PROPELLERS

VITAL STATISTICS

A propeller converts the power of an engine into the pushing or pulling force which moves an airplane forward through the air. It's a precision-made device. And it's tough! It has to be—to stand the punishment dished out by the engine and the elements.

Propeller and engine work together as a TEAM. Without the help of the other, neither can do its job. The main purpose of an engine is to spin the propeller. The main purpose of a propeller is to convert the engine's work into something useful.

Before you get into the subject of how a modern airplane propeller works, it would be well worth while to have a look at its principal parts. They're illustrated in figure 1, and include the following:

BLADE—One arm or "limb" of a propeller from the hub to the tip. Propellers may have from one to four blades.

BLADE BACK—The surface of the blade which can be seen by standing in front of the airplane.

BLADE FACE—The surface of the blade which can be seen by standing directly in back of the airplane.

HUB—The central portion which is fitted to the engine crankshaft and carries the blades.

SHANK—The thickened portion of the blade near the center of the propeller.

TIP—The portion of the blade farthest from the hub.

LEADING EDGE—The "cutting" edge, or forward edge of the blade that leads in the direction the propeller is turning. The other edge (rear edge) is called the TRAILING EDGE.

Figure 1.—Parts of the propeller.

Although most Navy airplanes don't have them, SPINNERS are sometimes used on propellers. They are cone-shaped streamlined cups or fairings which fit over the hubs of propellers and revolve with them.

You may run into an accessory for propellers called the CUFF. It is a sleeve slipped over the round portion at the shank of a metal propeller blade to continue its airfoil action down to the hub.

One-bladed propellers are uncommon, but have been tried experimentally. The three-bladed type is the most common in the Navy.

The first airplane propellers were made of wood, and even today wood propellers are found on some small engines. Most airplanes of modern manufacture, however, are equipped with metal propellers of either forged aluminum alloy or steel construction.

If you take a look at the blades of an electric fan, you'll see that they have a basic resemblance to the blades of a propeller. The fan blades CURVE slightly from edge to edge and are fastened to the hub of the fan at a SLANT. The CAMBER (curvature) of each blade makes it look in cross-section very much like a thin airplane wing. Look at a cross-section of the blade. The distance between the leading and trailing edges is the CHORD LINE, as illustrated in figure 2. The acute angle between the chord and a plane perpendicular to the axis of rotation is the BLADE ANGLE.

The ANGLE OF ATTACK is the angle between the blade chord and the RELATIVE WIND. The direction of the relative wind depends in part on the forward speed of the airplane.

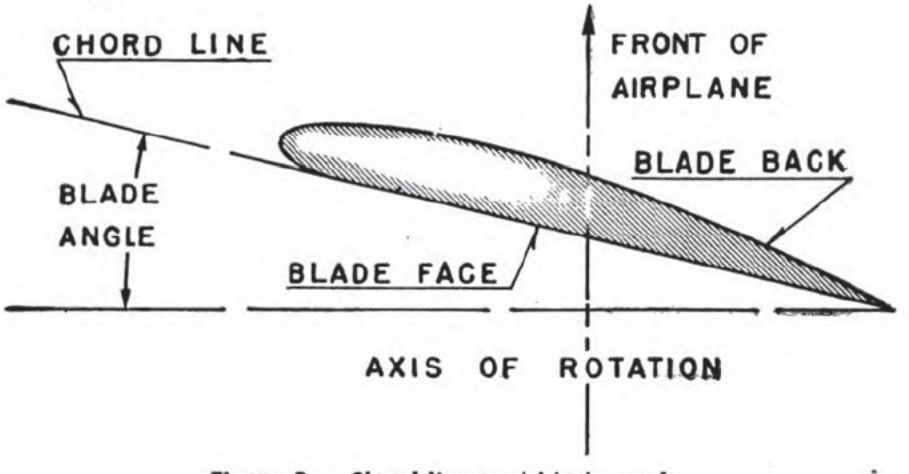

Figure 2.—Chord line and blade angle.

HOW IT WORKS

Generally speaking, the airplane propeller is simply a series of rotating AIRFOILS. When the engine turns a propeller, relative motion is set up between the wing-like propeller blades and the air. These blades (think of them as airfoils) set up a "lift" action—or THRUST—similar to that of a wing moving through the air. Of course, this lift is actually a PULL or a PUSH because the

propeller blade lift operates in a direction approximately at RIGHT ANGLES to the lift of the wing. The propeller thrust will pull the airplane along if the propeller is mounted ahead of the engine, or push it ahead if the propeller is at the rear. If the propeller is forward, the airplane is called a TRACTOR type. If aft, it is called a PUSHER.

Naturally, as the propeller pulls or pushes itself through the air, it also carries along anything that happens to be hitched to it—in this case, the engine and the rest of the airplane. You can readily see how important it is to have propellers attached securely to the engines, and engines fastened firmly to the airplane.

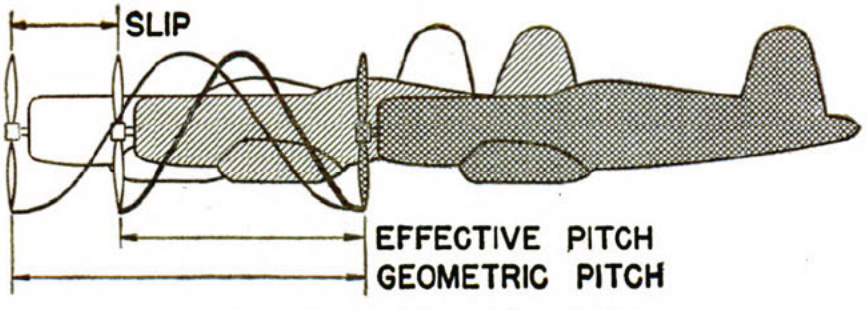

Figure 3.—Propeller pitch and slip.

A turning propeller tends to move forward through the air. Each time it turns it gives a pull or push to the rest of the airplane attached to it. The faster it spins, the greater the pull or push. The total motion of the propeller with respect to the air is somewhat like that of a screw being driven into a block of wood by means of a screwdriver. The distance that a propeller would move ahead through the air during each revolution, if the air were a solid medium like wood, is called the GEOMETRIC PITCH of the propeller. Actually, since it is turning in air instead of wood, the propeller does not move ahead quite as far as it would

in a solid medium. The distance it really moves forward is known as the EFFECTIVE PITCH. The difference between the geometric pitch and effective pitch is called the SLIP. In figure 3, you see this difference diagrammed.

Picture a propeller in motion at high speed. Its blades are practically invisible, but the effect it gives is that of a wheel. In fact, it resembles a giant pinwheel. In rotating, the blades whirl around the propeller hub just as the spokes of a wheel whirl around the wheel hub.

That means the outer tips of the blades move faster than the parts of the blade near the hub. And by moving faster, the tips of the blades "bite" bigger chunks out of the air—have much greater PULL or traction. Consequently, the blade doesn't need as great an angle of attack—or "twist"—at the tip as it does farther down to develop the same amount of pull. The twist of the blade is designed to provide more nearly uniform pull throughout the blade's length.

One of the main requirements of any propeller is an ability to withstand severe stresses. These stresses are greatest near the hub. The major ones and what they do to the propeller are pointed out in figure 4. Chief among them is CENTRIFUGAL FORCE, (*A*) which tries to make a spinning blade pull away from the hub. To prevent the blades from breaking into fragments or from flying off into space, the central portions are made thicker in cross-section.

There is also a THRUST BENDING FORCE, (*B*) that acts on the blades. A spinning propeller tries to forge ahead but is held back at the hub by the load of the airplane. The blade tips, which are thinner and lighter than the blade shank, bend forward just as the tip of a thin stick bends when you wave it through the air.

The sum of these forces causing the blades to bend is carried at and near the hub. Hence, the section of the blade at the hub must be made thick and stocky.

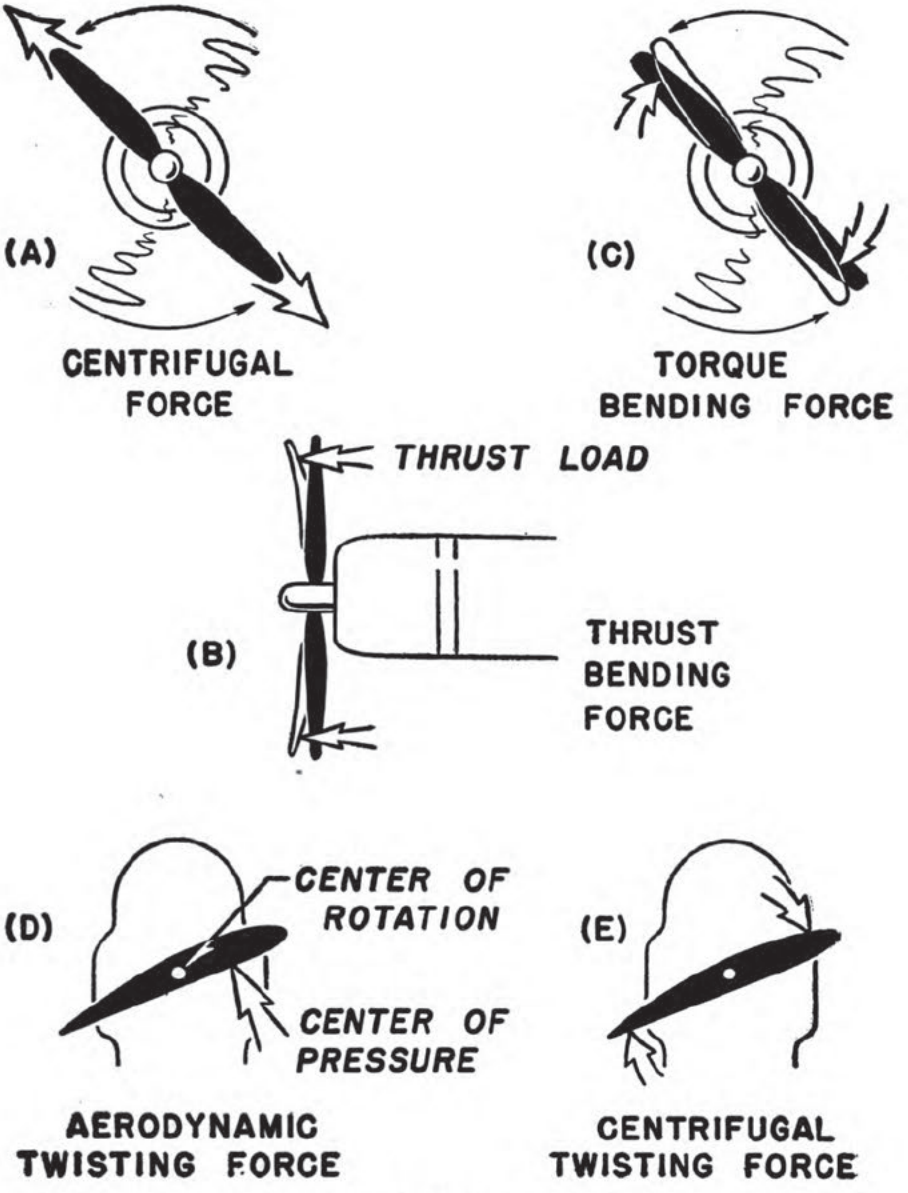

Figure 4.—Forces which act on propeller blades.

To some extent, centrifugal force and thrust bending force oppose each other. In other words, the centrifugal force tends to correct the bending

force. But the propeller is right in the middle—taking all the punishment.

Another bending force that must be considered is known as the TORQUE BENDING FORCE (*C*) or twisting force. The rotation of the propeller is caused by the turning force supplied by the engine crankshaft. Moved in a vacuum, the engine would have an easy time of it. But the blades of a propeller revolving through the air meet with mighty stiff resistance. This resistance results in a torque on the crankshaft—acting in the opposite direction to the torque provided by the engine.

Since every part of each blade takes some part in producing this torque, the full length of a blade is also subjected to a share of the load. Consequently a blade throughout its length tends to bend backward against the direction of rotation.

Another force tries to rotate the blades in the hub so that the blade angle will be increased. It's called AERODYNAMIC TWISTING FORCE. Notice (*D*) in figure 4. The point at which this force is exerted most strongly on the chord of the airfoil is known as the CENTER OF PRESSURE. Since under normal conditions, this center of pressure is nearer the leading edge of the propeller, the force tends to rotate the blade to a higher pitch. When the airplane goes into a dive, the center of pressure moves backwards and may even fall behind the center of rotation.

The CENTRIFUGAL TWISTING FORCE (*E*) on the blades is a tendency for the blades to twist into a low pitch. If you spin a watch on a string, you will notice that it will turn edgewise. This is because all parts of the watch try to remain in a plane perpendicular to the axis of rotation. Since the same thing happens to a propeller blade, it has a tendency to twist into low pitch.

Sometimes in the face of these forces, a propeller loses some of its rigidity. The result is a FLUTTER, a type of vibration in which the tips of the blades twist rapidly back and forth while the propeller is revolving. Fluttering causes a distinctive noise, which is often nearly drowned out by the exhaust noises. But propeller experts learn to spot the noise instantly. Fluttering will weaken the propeller and may even cause it to fail altogether.

WOOD PROPELLERS

Propellers made of wood were used on practically all airplanes in the early days of aviation. They were fairly satisfactory in most respects, because airplane engines weren't too powerful then, and practically all flying was done in fair weather. In the present day and age, however, powerful modern engines would tear wooden propellers apart in no time. You can't wait for sunny days to do your flying, nor can you pick your spots. Since wood propellers are relatively cheap and easily made, however, they are still used on many trainers.

Figure 5.—Wooden propeller.

In spite of the improvements made in airplanes during World War I, few changes were made up to that time on the original propeller developed by the Wright brothers. Ash, birch, cherry, mahogany, maple, spruce, walnut, white oak—many various kinds of wood were used. And solid wood remained the preferred propeller material until actual combat duty showed up some of its weaknesses.

You'll find today that the wood propeller is no longer carved from a single block of wood, but is now built up in layers—called LAMINATIONS—to give the propeller strength. This type of propeller is commonly used for testing engines in test stands.

Each lamination is usually about ¾-inch thick. The wood layers are first coated with warm hide glue, then clamped together and kept under pressure until the glue sets. Next, the wood is roughed into shape, being checked with a jig or contour board by which all points on the blades can be measured from a reference plane.

To allow for further aging and glue setting, this rough propeller is laid aside for about 10 days. Then, by hand working, it is finished to exact dimensions and contours, tested, and checked. Finally it is dressed with several coats of spar varnish, or with hot linseed oil, and rubbed down with fine sandpaper.

For protection, the tips of the blades and the leading edges are covered with thin sheets of brass or copper, or a special fabric. This reduces the danger of damage from the impact of sleet, hail, or pebbles. Wood propellers also are waterproofed by means of an acetate solution.

A metal sleeve is inserted in the hole at the center of the hub. The inside of this sleeve is machined to fit the splines on the end of the crankshaft. One end of the sleeve is made with a broad flange that presses against one side of the propeller. An equally broad washer fits over the other end and presses against that side of the hub. Bolts passed through the flange, the hub and the washer serve to hold the three parts together. The bolts also serve to transmit the turning force of the crankshaft to the propeller.

Wood propellers have several structural disadvantages. Their blades are subject to warping and are easily nicked and scraped. Their protective sheathing sometimes comes loose. The laminations may separate, especially under tropical weather conditions. And, of course, wood shears off easily, and can seldom be repaired satisfactorily when damaged.

METAL PROPELLERS

The majority of Navy airplane propellers are made either of aluminum alloy or of steel. Early versions of the aluminum-alloy propeller were forged from a single piece of metal. They were shaped much like a wood propeller, but with thinner sections, especially at the hub and blade roots. A splined steel bushing by which the propeller was attached to the crankshaft was pressed or screwed into the hub. Most modern aluminum-alloy propellers, however, are made with detachable and adjustable blades, with a high-strength alloy-steel hub.

Figure 6.—Metal propeller.

Aluminum alloy is excellent propeller material. When slightly bent, it can be straightened cold. If severely bent, the blade can be annealed, straightened and re-heat-treated. If the leading edges of the tips are slightly torn or ripped, the blades can usually be trimmed down.

While aluminum alloy is resistant to the normal damage done by rain, hail, or salt water spray, all metal blades should be wiped off with an oily rag after exposure to salt water. This will help check corrosion.

The metal propeller, besides being stronger and more durable than the one made of wood, gives better performance. And because it is heavier, it has a fly-wheel effect on the end of the crankshaft, which results in a smoother-running engine.

TYPES OF PROPELLERS

Many different types of propellers are in use today. They fall into four classes—fixed pitch, adjustable pitch, two-position controllable, and automatic propellers.

Fixed pitch propellers aren't used widely, most of them being on small, light airplanes. They are made of one piece of wood or metal, and the pitch of their blades cannot be changed. Adjustable pitch propellers have blades that can be rotated in the hub by loosening the clamping rings while the airplane is on the ground, but they cannot be adjusted during flight. The two-position controllable and the automatic propellers are the types you'll work with most frequently. As their names imply, they are made to provide changes in the pitch of the blades.

Modern Navy propellers include the TWO-POSITION CONTROLLABLE, THE CONSTANT-SPEED, the HYDROMATIC FULL-FEATHERING, and the ELECTRIC. The constant speed, hydromatic and electric types are automatic propellers.

The two-position controllable is in a class by itself. It has two pitch settings and is controlled by the pilot. The automatic types have any number of pitch settings and are controlled either by the pilot or by a governor control unit.

It has been found that, when an airplane is moving at relatively low speed during a take-off and climb, the pitch of the blades should be LOWER (permitting more revolutions per minute) than during level cruising flight. The two-position controllable

propeller was designed to accomplish shifts to low pitch during flight. The pitch of the blades is changed by a hydraulic device, which rotates the blades in the hub. ONLY HIGH- AND LOW-PITCH ADJUSTMENTS ARE POSSIBLE WITH THIS MECHANISM. Often, of course, it's desirable to use a pitch in between these two extremes, and you can obtain these intermediate pitches if your airplane is equipped with an automatic propeller.

Constant-speed propellers are operated either by oil pressure or by electricity and, within reasonable limits, keep the blades at the proper pitch angle for whatever maneuver the airplane is called upon to make. Some constant-speed propellers have a further refinement which permits alinement of the blades with the direction of flight, so that if one engine stops, you can prevent its propeller from "windmilling," or turning over from the force of the wind. Propellers with this feature are designated as full-feathering propellers.

Various differences of control, operation, construction, and performance exist among all types of propellers. But despite differences in detail, there are certain family characteristics which ALL have in common.

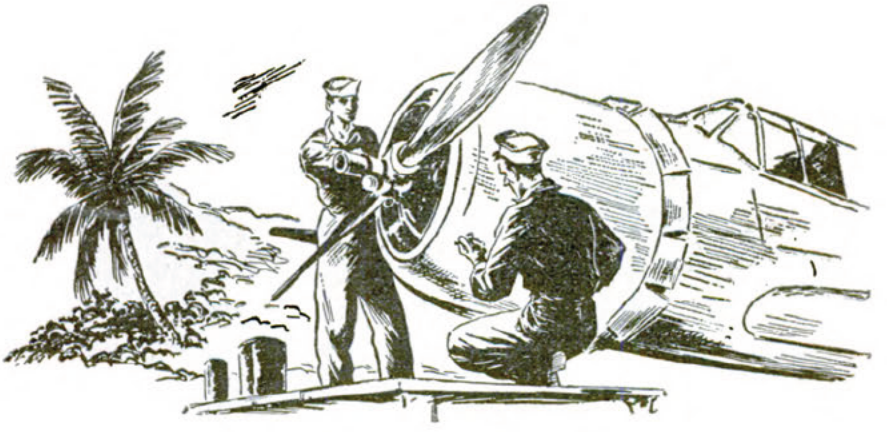

CHAPTER 2

TWO-POSITION CONTROLLABLE PITCH PROPELLER

HIGH-LOW

The two-position controllable pitch propeller was designed to overcome the waste of engine power which resulted with fixed pitch propellers.

An engine with a fixed pitch propeller turns at its rated rpm (revolutions per minute) when you use full-throttle in LEVEL flight. This means a loss of airplane performance under all other conditions. For instance, it means the engine is held down to about 80 percent of its normal rpm with corresponding loss of power when the airplane is taking off. Thus, an engine normally rated at 400 hp (horsepower) would develop less than 320 hp at the time of take-off. During a climb, this same propeller would hold the engine down to about 85 percent or 90 percent of its rated speed, again reducing the horsepower output of the engine and the performance of the airplane.

This loss in engine power can be reduced considerably by the use of the two-position controllable propeller which permits the change in blade pitch to be made at will. Low pitch is used dur-

ing take-off and climb. High pitch is used during level flight.

The two-position, controllable pitch propeller, as its name suggests, has only two pitches—HIGH and LOW. The selection between high and low pitch is made by a hand-operated control. The low position is used when the airplane is traveling at low speeds, as in taking off and making steep climbs. In addition to the increased horsepower obtained by using low pitch, the slip of the propeller is much less when the airplane is moving slowly.

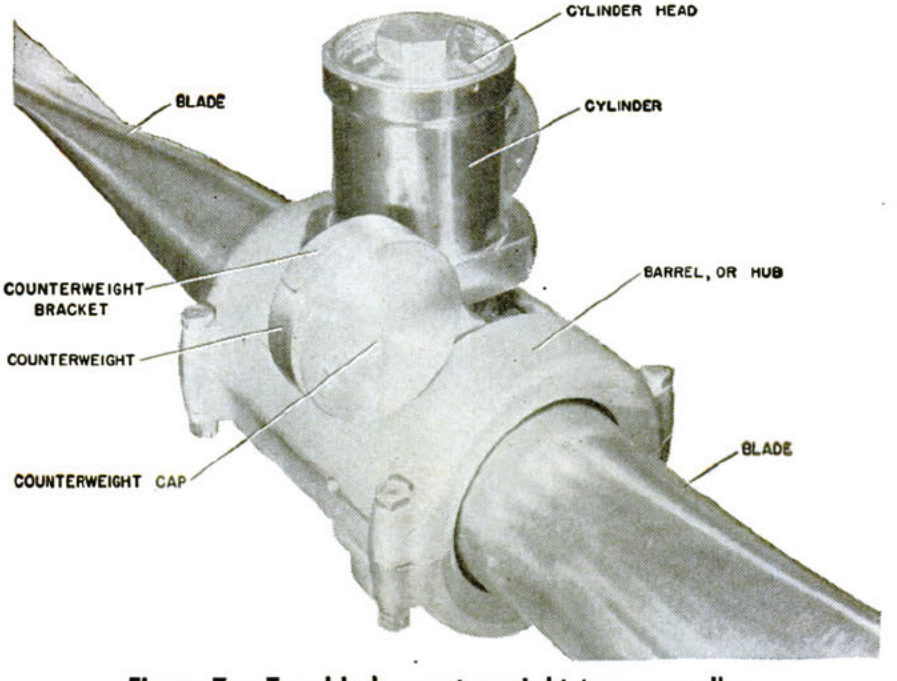

Figure 7.—Two-blade counterweight type propeller.

When the plane is cruising or traveling at high speeds, however, the pitch is shifted to high.

The three major parts of the propeller are the SPIDER, BARREL, and BLADES.

The spider is the foundation for the entire propeller—the skeleton to which the other parts are attached. Its central bore is splined—or grooved—to fit on the engine shaft. It is through these splines that the engine torque is transmitted to the propeller. The spider arms are used to

support the blades and provide a smooth surface on which the blades turn. Thrust and torque loads are absorbed by the spider arms.

The barrel of the propeller houses the entire hub mechanism and holds the blades on the spider arms. It is supported on the spider by means of micarta (plastic) blocks located between the spider arms. The shoulders of the barrel fit over the outer bearing races of the blades and absorb the centrifugal force on the blades.

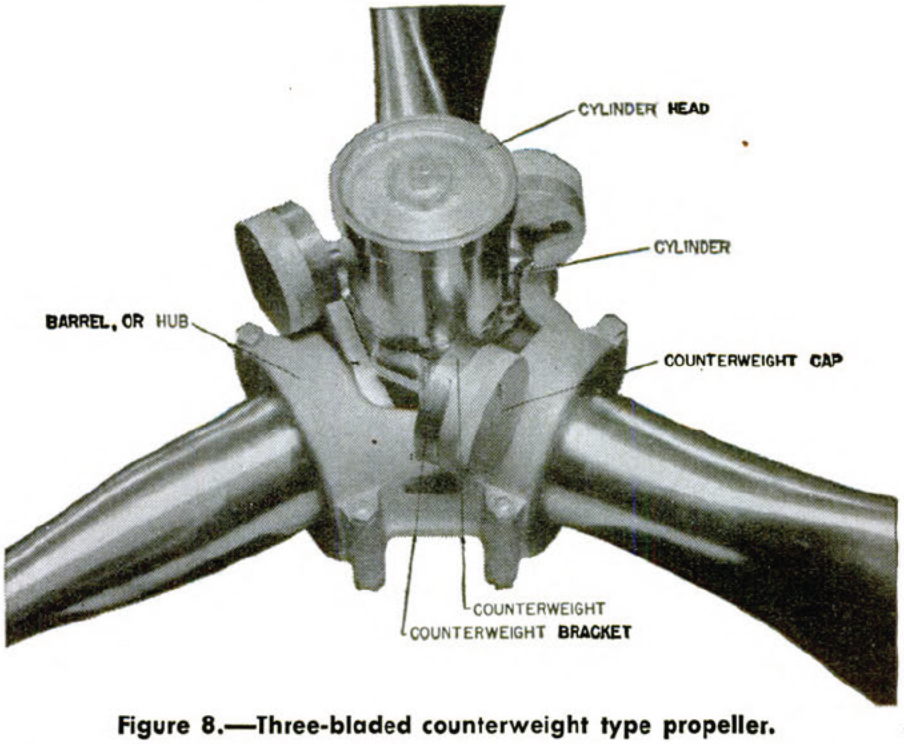

Figure 8.—Three-bladed counterweight type propeller.

You remember that centrifugal twisting force is acting on the blades tending to force them into low pitch. However, it is possible to reverse this tendency by adding COUNTERWEIGHTS to the blades. By means of the counterweights, the entire blade and counterweight assembly will have a tendency to go into high pitch.

The pitch changing mechanism is operated by a CYLINDER fitted on a PISTON (propeller shaft extension) between the counterweights.

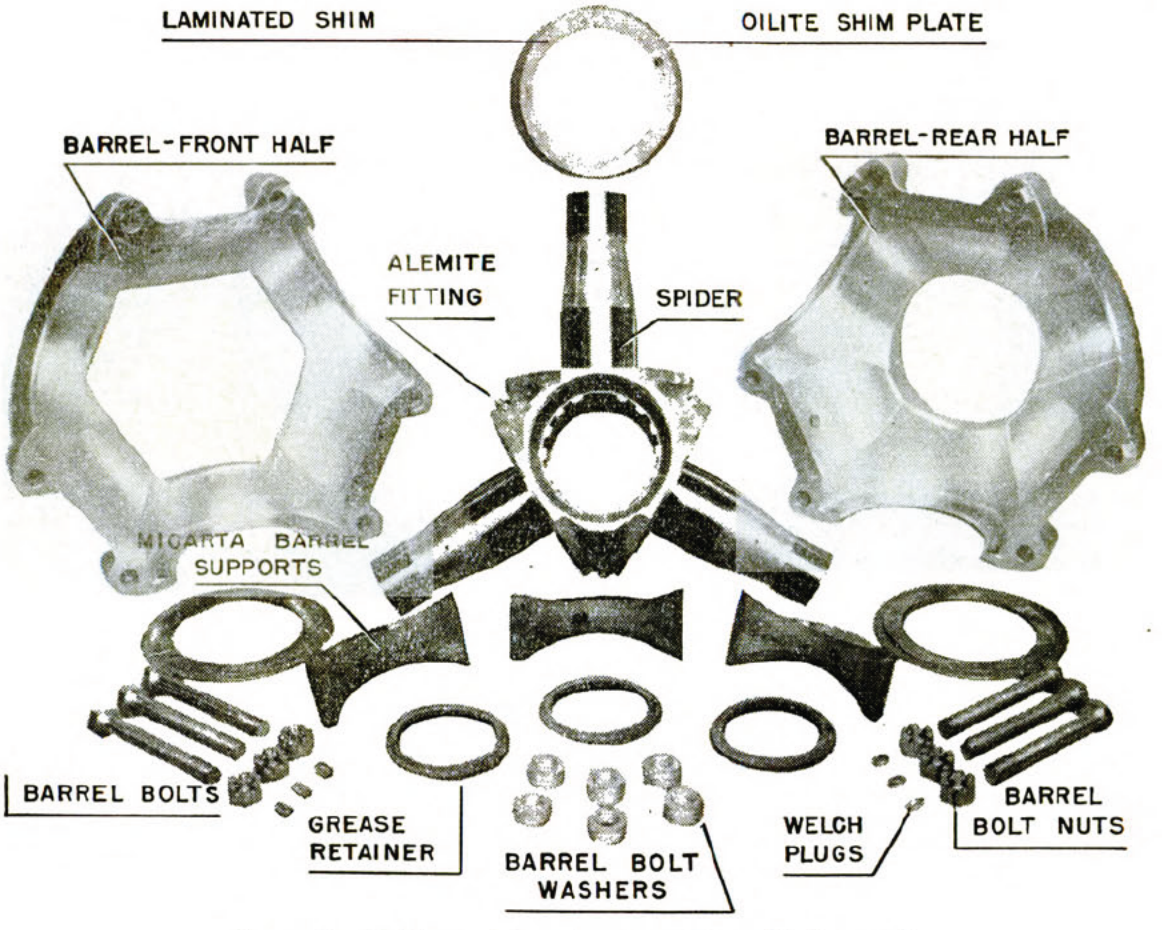

Figure 9.—Spider and Barrel parts. (Three-blade prop.)

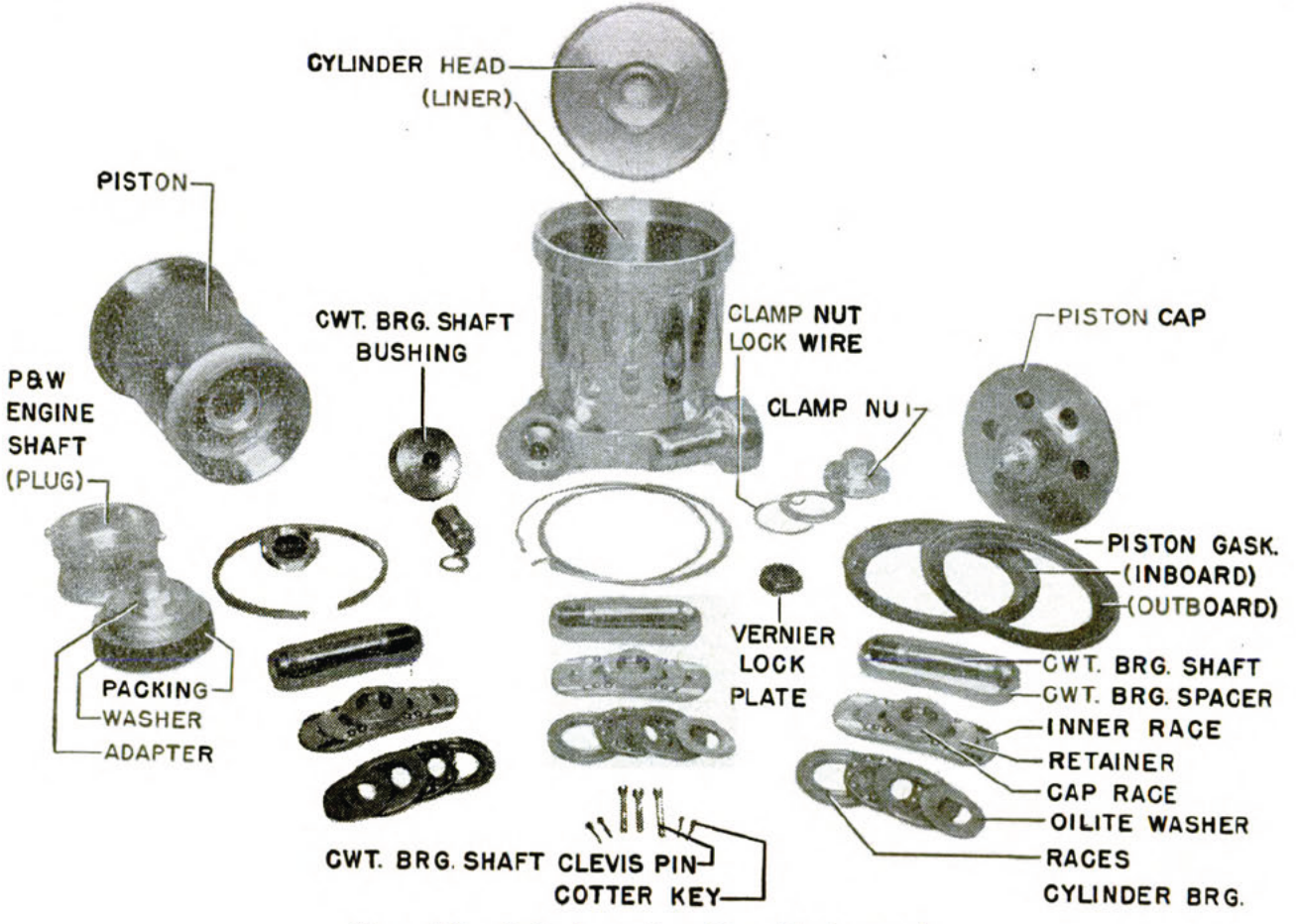

Figure 10.—Cylinder parts. (Three blade prop.)

You have a photograph of the pitch-changing assembly in figure 11.

The cylinder carries RODS, or arms, projecting from it, called COUNTERWEIGHT BEARING SHAFTS. These pass through slots in the counterweight brackets, and change the reciprocating motion of the cylinder into the rotary motion of the brackets and blades.

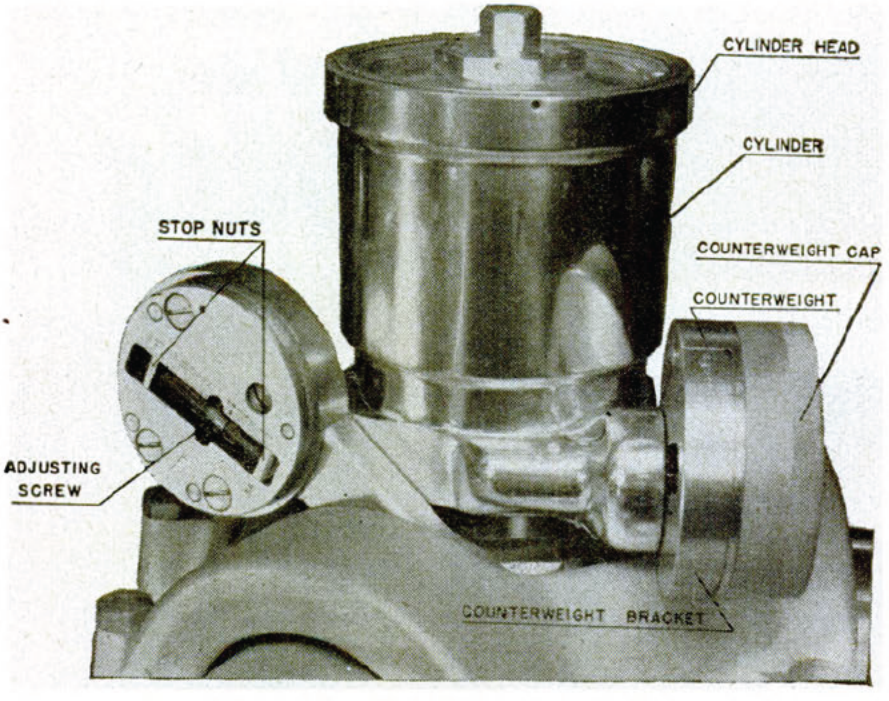

Figure 11.—Pitch-changing assembly.

The cylinder rides on the piston gaskets at the outboard end of the piston. The inboard end of the cylinder incorporates a micarta chafing ring to prevent galling.

The piston screws onto the end of the propeller shaft. With the front cones, it acts as a retaining nut for the propeller.

HOW IT WORKS

The are TWO forces that make it possible to change blade pitch—centrifugal force and hydrau-

lic pressure. Oil pressure changes the blade angles from high to low pitch, whereas centrifugal twisting force changes the blade angles from low to high by acting on the counterweights attached to the blades.

When the control is set for low pitch, a three-way valve is turned so that it connects the engine oil-pressure line with an oil line leading to the

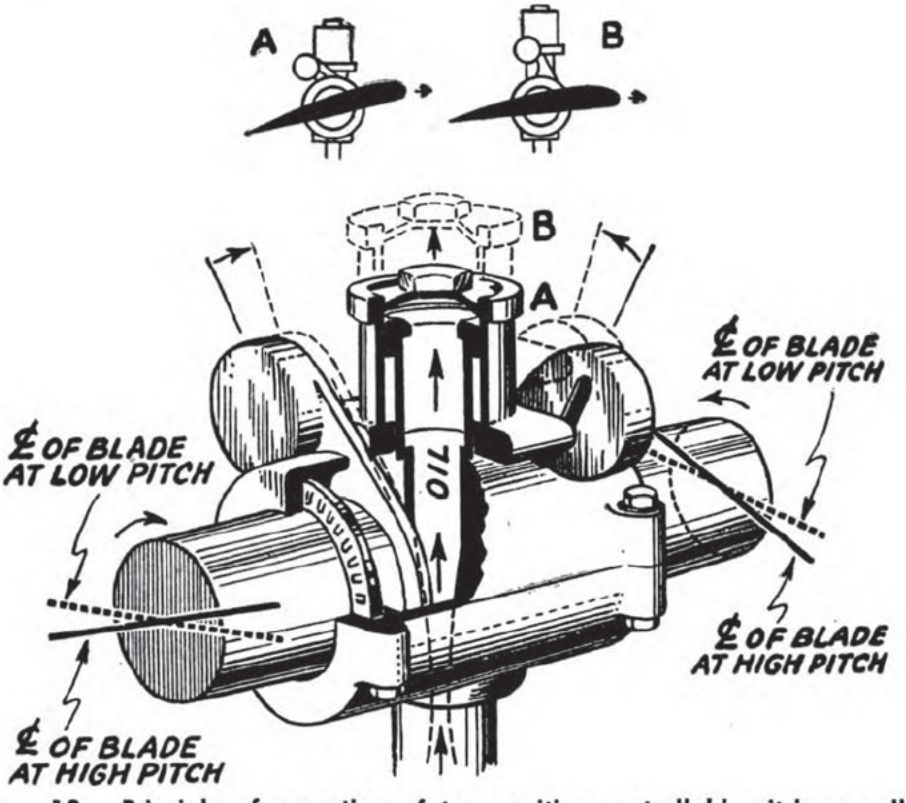

Figure 12.—Principle of operation of two-position controllable-pitch propeller.

pitch-changing cylinder. Oil immediately starts flowing through the valve, through a collector ring, into the inside front end of the crankshaft, and then into the pitch-changing cylinder. The incoming oil forces the cylinder to move forward on a stationary piston. This movement of the cylinder rotates the blades to low pitch position.

Remember, it is the oil pressure in the propeller cylinder which holds the blades in low pitch, and

prevents the pull of the centrifugal force on the counterweights from rotating them to high pitch.

Suppose you want the blades at high pitch again. You set the control to HIGH, and, presto, the three-way valve turns again. In this position, it connects the propeller line to a drain so that the oil flows out of the pitch-changing cylinder. Centrifugal force goes into action, and the counterweights move outward. Down goes the cylinder against the piston, and the blades rotate into high pitch position.

Take a look at the cutaway sections of the pitch-changing mechanism in figures 13 and 14. Here you see the vital parts of a pitch-changing cylinder and piston for a two-bladed propeller of the counterweight type. They are approximately the same as for a three-bladed propeller except, of course, that three counterweights are used on the three-bladed type. The principle of pitch-changing operations is the same, however, for both two- and three-bladed propellers.

Figure 13 shows the mechanism with the control set for low pitch. The cylinder has moved up on the piston, and the part of the cylinder above the head of the piston is filled with oil.

Notice the CAM SLOTS at the left and right of the cylinder. The movement of the cylinder FORWARD on the piston moves the counterweight bearing shafts forward, which in turn move the counterweight brackets forward, thus putting the blades into a lower pitch.

As the counterweight bearing shafts move in the counterweight-bracket cam slots, they turn the brackets. The brackets are attached to the blade bushings by index pins. So, as the brackets turn, the blade is also turned, and the pitch is changed.

In figure 14, you have turned the control to high pitch. The oil has run out of the cylinder, which

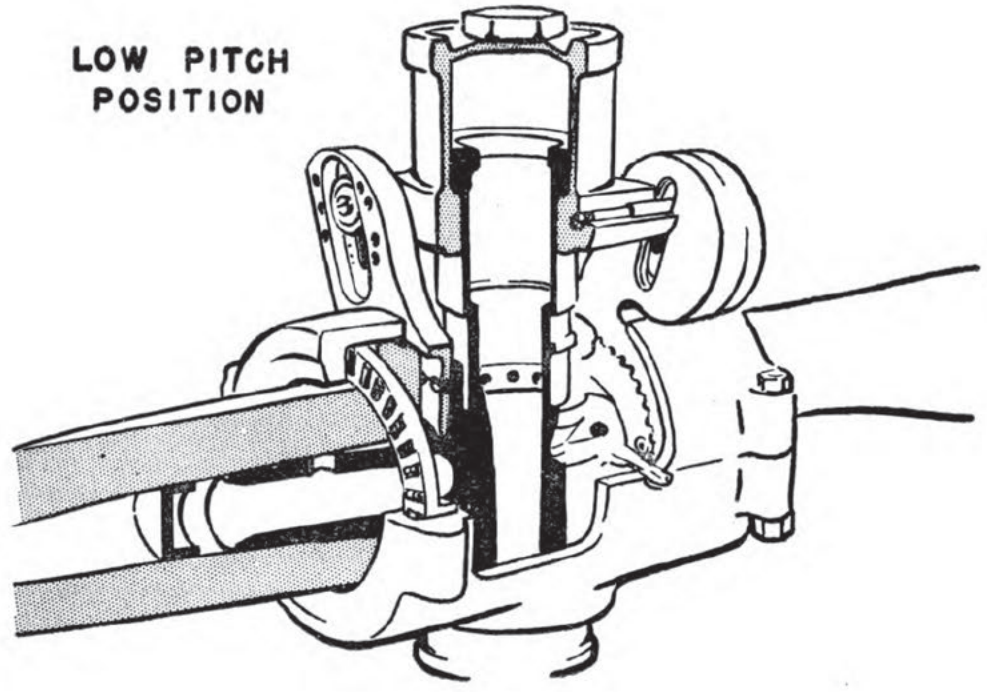

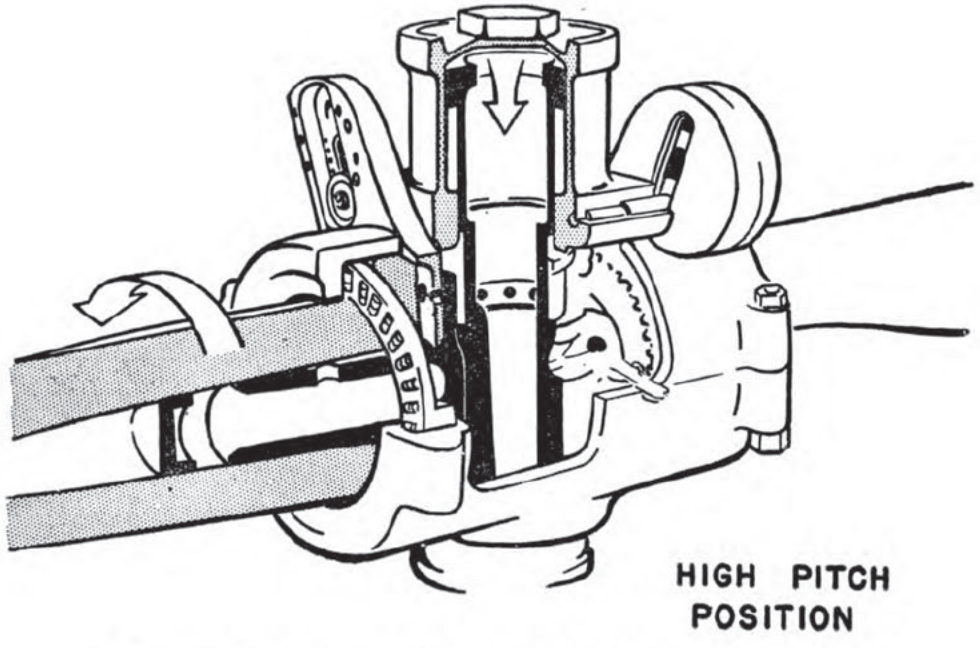

Figures 13 and 14.—Cutaway of pitch-changing mechanism.

is now resting on the piston. The downward movement of the cylinder has allowed the shafts to move down to the bottom of the cam slots, and has freed the counterweights so that they swing out as the blades revolve.

Here's the whole story in a nutshell. FILLING the cylinder with oil holds the counterweights FORWARD and keeps the blades at low pitch. Draining the oil from the cylinder allows the counterweights to swing inboard, and this turns the blades to high pitch.

REMOVAL

There's no need to tell you how important it is that every part of the propeller be in perfect condition. A flaw or neglected repair is the first step towards DISASTER. Careful, thorough inspection of propeller parts is the first step in PREVENTION. Before you can inspect propeller parts, however, you have to know how to remove the propeller from the crankshaft, and how to disassemble it.

Four steps are used in removing the propeller from the crankshaft.

First, disengage the cylinder head lock wire and remove the cylinder head. Have a pail handy to catch the oil from the piston gasket nut.

Then disengage the piston lock ring. You do this by removing the cotter pins. It is good practice to slide the lock ring up on the piston and safety it there.

Then unscrew the piston. This will start the propeller off the engine shaft.

Finally, slide the propeller slowly forward on the engine shaft and remove. Take care not to damage the engine shaft threads. And take care, on Wright engines, not to hit the oil supply pipe.

You have the propeller free now. Here's how you disassemble it.

Unscrew the counterweight caps, and record the position of the adjusting nuts with relation to the scale stamped on the counterweight face. Remove the adjusting screws. Take off the counterweights and remove the counterweight bearing shaft pins. Unscrew the counterweight bearing shafts and remove counterweight bearing assemblies with spacers. Be careful that the oilite thrust washers do not fall. Disengage the snap ring from the spider groove, and lift the piston-cylinder assembly. Make sure that the cylinder bearing shaft-thrust bearing assemblies do not fall out of the cups of the counterweight bearings shaft bushings and that the split front cone does not slip off the piston. Remove the barrel bolts, and split the parting of the front and rear halves of the barrel, using a brass or aluminum wedge.

Now you're ready to drift off the front half of the barrel. Take care to keep the arms of the brackets turned so that they do not touch the barrel as it is drifted up. Then drift off the rear half of the barrel. Hold the thrust retainers in place or they will fall when the rear half of the barrel drops off. Wrap the blade shanks with cloth to prevent the steel thrust races from marring or other injury. Remove the alemite fittings. This will make it easy to pull off the blades. Remove the oilite shim plates and brass shims. Keep them in PAIRS, marked so that they may be reassembled on the proper spider arms unless the brass shims need replacing. Remove the micarta barrel supports and the leather grease retainers. Note and record the location of the brackets on the blade bushings, then remove the brackets from the blades. Take care that the

index pins are not lost when the brackets are drifted off the blade bushings.

With that step you have completely disassembled the propeller and it is ready to be cleaned, inspected, overhauled, and assembled. Of course, all this isn't as easy as it sounds. It takes a good man considerable time to get the work done right.

INSPECTION AND REPAIR

One of the most common propeller ailments is the leakage of engine oil from around the cylinder head, from between the piston and cylinder, from around the front cone, or from the rear of the barrel. You can be pretty certain that such trouble is caused either by loose-fitting working parts, or by loose, worn or damaged gaskets or washers. Correction of oil leakage depends, therefore, on checking the fit of the parts around which the leak occurs, and checking washers and gaskets in the vicinity.

The time between propeller overhauls cannot be set definitely. It depends largely upon the type of operation and maintenance given the propeller. In general, however, propellers should be changed whenever the engine is changed, the overhaul period being the same for both. And that holds good for ALL types of propeller.

The following chart will give you some idea of the type of defects to watch for when you inspect the propeller, and indicates what's to be done about them.

PART	DEFECT	WHAT TO DO
Spider (arms, rear cone seat and splines)	Cracked	Scrap
Piston	Cracked	Scrap
	or	
	Bent	Scrap

Part	Defect	What to do
Head	Worn	Scrap
Cylinder	Scratched or worn	Rework with fine emery cloth
Barrel	Cracked	Scrap
Counterweights	Weights unbalanced, or improperly assembled	Replace
Blades	Bent	Return to factory for repair if bend is beyond field repair. Otherwise, correct by straightening cold, or by annealing and straightening while hot.
	Nicked, cut and scratched	File blemish smooth, and then polish with fine emery cloth or crocus cloth. Etch in caustic soda and neutralize with nitric acid. Wash down with water.

The following parts are expendable. Occasionally they can be reinstalled, but it's usually best to discard them and put new ones in their places.

Cylinder head gasket.
Inboard and outboard piston gaskets.
Cylinder bearing shaft bearing retainers.
Counterweight bearing shaft assemblies.
Front cone packing washer.
Brass torque shims.
Counterweight bearing retainers.
Oilite thrust washers, cotters, lock washers.

ASSEMBLY

More than 30 separate steps are involved in assembling a controllable pitch propeller, but the process isn't as complicated as it may sound. Be-

fore you study the method of assembly, however, there are some things to remember.

The propeller is a carefully designed instrument, machined to close tolerances and subject to accurate adjustments. Therefore, make it a rule to be especially careful to avoid even the slightest damage to parts in handling and assembling them.

For instance, metal bearing races on blades should be wrapped in cloth to keep them from marring or injuring the blade shanks during assembly. Avoid marring or scratching the parting surfaces of the barrel. Handle every bearing surface as carefully as watchmakers handle the delicate parts of a watch. All propeller parts must be absolutely clean and free from grit before being assembled. Bearings should be examined for perfect smoothness, and all friction surfaces should be coated with light oil or grease.

In most cases Navy propeller parts are numbered, so that when two or more pieces have to go together, you can match them up "by the count." For instance, when you assemble the counterweight brackets on their blades, you can check the bracket numbers and blade numbers to make sure you get the correct ones together. Similarly, when a part like a ball-bearing race has to be lined up with a blade, you'll find guidance marks to help you aline them.

Start the assembly of the propeller by placing the spider accurately and firmly in position. It's well to remember that UNLESS THE SPIDER IS RIGHT, THE PROPELLER WON'T BE RIGHT. If you give careful attention to this, you'll save yourself a great deal of trouble.

Now you can take up the assembly of the propeller, step-by-step.

Place the splined bushing on the spindle of the checking table. Put the rear half of the barrel

over the spindle and splined bushing. Slide the spider down on the splined bushing and coat the spider arms with grease. Place the brass torque shims on the shoulder at the face of the spider arms and the oilite shim plates on the spider arms against the laminated shims. The leather grease retainers should be placed in the fillet at the base of the spider arms. One face of the grease retainer is turned to fit this fillet.

As you've already learned, you should wrap the blade shanks with cloth to prevent the steel thrust races from marring or injuring them. Assemble the blade brackets on their correspondingly numbered blades, being sure that four index pins are used for each blade. If the propeller has just been received from the factory, fill the blade bushings with grease to within 2 inches of the top. But if the propeller is being assembled after an overhaul and its balance must be checked, leave the blade bushings DRY.

Install the micarta barrel supports. After making certain that the alemite fittings have been removed from the spider, shove the blades on their correspondingly numbered spider arms. If the propeller has just been received from the factory and the blade bushings have been filled with grease, the excess grease will be forced through the open alemite fitting holes. Extensions, made from 1/8-inch pipe and threaded on one end, should be used to lead this excess grease through the micarta barrel supports.

Screw in the alemite fittings and then cover the blade thrust bearing races and retainers with a thin coating of "Mobilgrease" #2, or its equivalent. Place the thrust bearing retainers in position between the thrust races and aline the etched "O" on the inner thrust race with the stamped "O" on the blade shoulder.

Now, lift the lower half of the barrel up on the spider blade assembly so that it starts evenly on all three outer thrust races. Make sure that the numbers on each arm of the barrel correspond with the blade numbers. Using a rawhide mallet, tap the lower half of the barrel up into place on the assembly. Then place the front half of the barrel over the counterweight brackets and tap down in place. Make sure that the numbers on each arm match the corresponding blade numbers. You'll have to rotate the brackets in order to fit the front half of the barrel in place. Keep the brackets clear of the barrel as it is tapped home. Install and tighten the barrel bolts in their respectively numbered holes. Use a wrench having not more than 14 inches leverage. EXCESSIVE TIGHTENING OF THE NUTS MAY CAUSE FAILURE OF THE BARREL BOLTS.

At this point, you should check the tightness of the fit of the blades in the hub assembly. This is done by measuring the amount of torque—or twist—necessary to turn each blade.

Using a lever arm clamped to the blade and a set of spring scales attached to the other end of the lever arm, apply sufficient pull on the scales to turn the blades. This pull (in pounds) multiplied by the length (in feet) of the lever arm is the torque (in units called foot-pounds).

Check the latest Service Bulletin or Technical Order to be sure of the proper torque.

If the torque on any of the blades is not correct, the propeller MUST be disassembled again. Corrections are made by inserting the proper sized brass torque shims. Never make an attempt to reduce the thickness of the oilite shim plate to obtain the correct torque.

Assemble the cylinder and the split front cone with a dummy piston, and put in place on the

hub assembly. Be sure that the numbers on the cylinder arms correspond with the bracket numbers. The regular piston has a small hole at its base for the oil supply pipe. This hole is too small to permit the spindle or the mandrel to pass through, hence the necessity of using a dummy piston during assembly. This may be another piston in which the base has been cut out sufficiently to allow the mandrel to pass through.

Tighten the dummy on the splined bushing. Place the cylinder-bearing-shaft thrust-bearing assemblies in the cup-shaped counterweight-bearing-shaft bushings. The race with the smaller inside diameter is the INNER race, and should be installed in the cup-shaped bushing first. Install the counterweight bearing races and retainers. Slip the oilite thrust washers between the outer races of the cylinder-bearing-shaft thrust-bearing assemblies and the brackets, and tighten the counterweight-bearing shafts in place. Be sure that the numbers of these shafts correspond with the numbers on the cylinder arms.

Place the inboard (long-flanged) and outboard (short-flanged) piston gaskets on the piston and secure them in place with the dummy piston gasket nut. Fasten the counterweights on their respectively-numbered brackets, and install the adjusting screws in the counterweight slots. Then screw on the correspondingly-numbered counterweight caps.

The propeller is now ready to have its angles checked. The full high and low pitch angles should always be checked to make sure that the brackets have been indexed correctely on the blade bushings.

Fill the propeller blade bushings with grease. This should be done by disassembling the propeller, taking the blades off the spider arms and

filling them to within 2 inches of the top with "Mobilgrease" #2 or its equivalent. This procedure eliminates the possibility of air pockets forming in the blade bushings and spider arms. Finally, reassemble the propeller.

The regular 20° piston (with snap ring and split front cone) may be assembled in the propeller in place of the dummy piston provided the splined bushing is shimmed up high enough to prevent the spindle of the table fixture from touching the base of the piston when the piston is tightened on the splined bushing. After you have installed the inboard (wide flange) piston gasket, the propeller will be ready to be placed on an engine crankshaft.

Shift the blade angles by moving the cylinder up and down. This will aline the piston-cylinder assembly. When you have everything in order, and are ready to place the propeller on the crankshaft, always take one last look to make sure that all of the threads on the outside of the crankshaft and inside the propeller mounting assembly are straight, undamaged, and are not burred or pulled. CHECKING EVERY THREAD SHOULD BE A HABIT IN ALL PROPELLER ASSEMBLY WORK.

Be dead certain that all threads are in perfect alinement before starting any threaded part into place. Don't ever use force to tighten a piston or any similar part, if there is any binding or resistance between threads. And always be positive that there are no crossed threads.

And, incidentally, DON'T decide that if threads are damaged, all you need to do is rechase them. On many parts of a propeller, the relative pitch diameters are such that the threaded pieces are not firmly clamped together unless the threads are cut to their proper tolerances. Make it a rule, therefore, to consult approved service literature

(or a propeller specialist) before you rechase any threaded part of a propeller.

You'll find that certain details of propeller assembly will depend on the make of engine to which it eventually will be attached. Some engines, for example, require a gasket (packing) under the oil supply line of the propeller. Others do not. On Wright engines you have to screw the oil supply pipe into the oil plug hole, which is inside the crankshaft. On the other hand, Wright engines do not require packing washers on the front-propeller cone as some other makes of engines do.

Most Wright engines have a CRANKSHAFT VENTILATION or BREATHER SYSTEM, while Pratt and Whitney engines have a BREATHER SYSTEM which is ventilated through the crankcase. Fundamentally, the CRANKSHAFT BREATHER is just what the name implies—a unit which allows the engine to "breathe." It is a hollow crankshaft that exhausts internal engine gases through the front end of the crankshaft. This makes it necessary to design a different type of propeller oil-supply assembly than is used in crankcase-breather engines.

The crankshaft-breather unit consists of a piston having drill holes through the wall at its inboard end to permit the crankcase gases to escape. A direct oil line conducts the oil through the center of the crankshaft, then through the piston to the other side of the piston head. A solid plate, through which the oil pipe extends, prevents the oil from flowing back into the piston. This plate serves as a retaining nut on the piston gasket, and also as an oil-supply retainer inside the cylinder.

The breather unit (used with engines that breathe through the crankcase) consists of a piston without drill holes. Oil, flowing from the

crankshaft, fills the entire piston up to the cylinder head. An oil pipe is not needed because there are no gases to contend with. There is, however, the possible chance of oil seeping between the inside diameter of the piston and outside drain of the crankshaft. A packing washer is added to the front cone to prevent such leakage. This necessitates an extra groove in the front cone to allow for the placing of the packing washer.

In some engines, an AIR-SEPARATOR PLUG is used. This plug allows any air that may collect at the center of the shaft after propeller installation to be bled from the system through a drain.

On certain propellers, the same type piston is used REGARDLESS of whether or not the engine breathes through the crankshaft. In these installations only the oil supply pipe is changed. In a Pratt & Whitney engine, the oil is supplied by a packing expansion plug with an oil pipe, joined to the piston through a packing gland at the inboard end. The Wright installation consists merely of a short extension of the oil supply pipe which joins the piston through the same packing gland.

To help the piston function as a retaining nut for the propeller, a front cone is attached by a groove to the bottom flange of the piston. The cone fits firmly against the front cone seat of the spider.

BALANCING

You probably remember as a youngster what happened when you got a bad balance on a see-saw—either you sat suspended in mid-air, or came down to earth with a bang. Something like that can happen in the assembly of propeller parts, too. Unless it's balanced properly, your propeller, like the see-saw, will play some tricks. To obtain cor-

rect blade angle settings and BALANCE, make sure the propeller spider is accurately located and firmly held on a bushing.

Best way to accomplish this is to use a splined bushing whose measurements are identical to those of the engine crankshaft. This bushing is inserted in the spider. When a piston with split front cone is tightened on the bushing, the front cone and rear cone are firmly seated in the ground tapers of the spider.

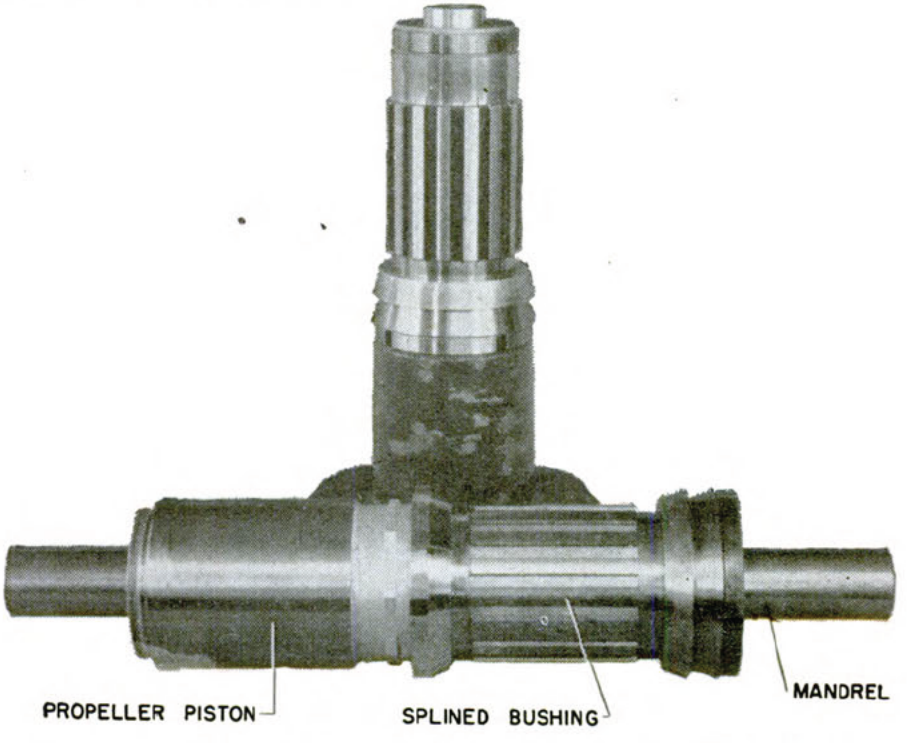

Figure 15.—Splined bushing and mandrel assembly. (Two views.)

The splined bushing, such as you see in figure 15, has a centering hole which fits either the spindle of the checking table or the mandrel used for balancing. This combination of piston, split front cone, spider, splined bushing, rear cone, and spindle (or mandrel) insures the elimination of any play and assures you of accurate blade settings and propeller balance.

To obtain DRY BALANCE, here are the steps you should follow.

Coat the bearing surfaces and shim plates with a light film of grease. Completely assemble the propeller on the splined bushing and checking table, except for the cylinder head. Shift the

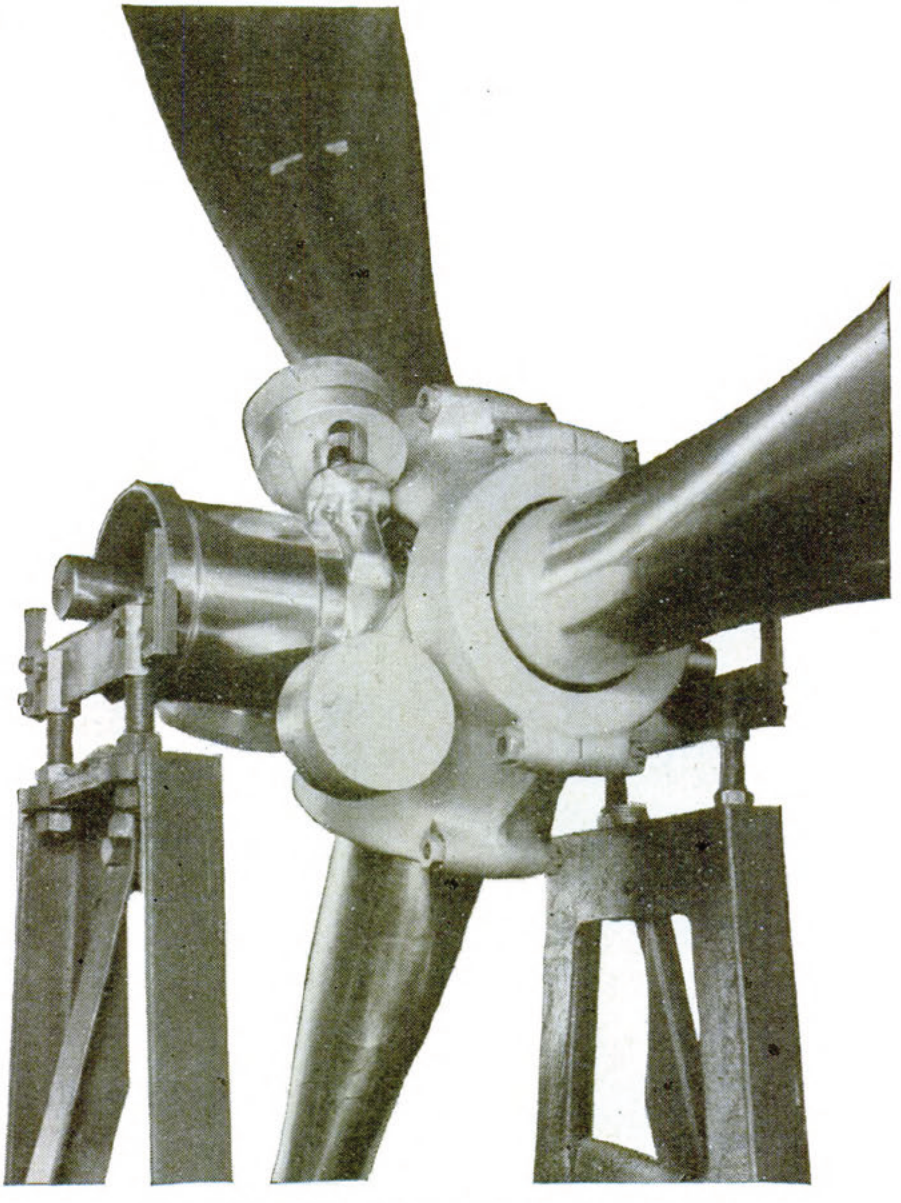

Figure 16.—Typical balancing stand and propeller.

blades to high pitch and check each blade angle at the 42-inch station to make certain they are all approximately the same. Remove the propeller from the checking table and insert the mandrel in

the splined bushing. Then place the propeller on a specially designed balancing stand, as in figure 16. Make sure the room is free of air currents, and the balancing stand is true. Otherwise you won't get accurate results.

Check each blade in a horizontal position. The propeller must not show any tendency to rotate. On 2-way propellers only, check the vertical balance with the blades perpendicular to the plane of the knife edges. There should be no tendency for the propeller to rotate. Three-bladed propellers don't get this check-up.

Horizontal balances can be equalized by inserting lead wool in the hollow barrel bolts on the light side of the assembly or removing lead wool from the barrel bolts on the heavy side. In case this is not sufficient, the propeller should be disassembled and balancing washers added or removed from the blade plug of the light or heavy blade. The propeller should then be reassembled, and the high and low pitch angles set accurately. After setting the blade angles, fill the propeller with grease and obtain the final balance. This is known as WET BALANCE. It is accomplished by adding grease to the light blade.

The angle at which the counterweight brackets are attached to the blades serves as the base or index setting for BLADE ANGLE ADJUSTMENTS. Blades actually do not maintain the same angle throughout their length, but vary from shank to tip because of their built-in twist. The "blade angle" is considered to be the angle of the blade at 42 inches radius. On the *E* and *D* shank blades in figure 17, the counterweight brackets are indexed to the blades by means of index pins (four for each blade) which fit in semicircular holes in the brackets and corresponding holes in the blade bushings.

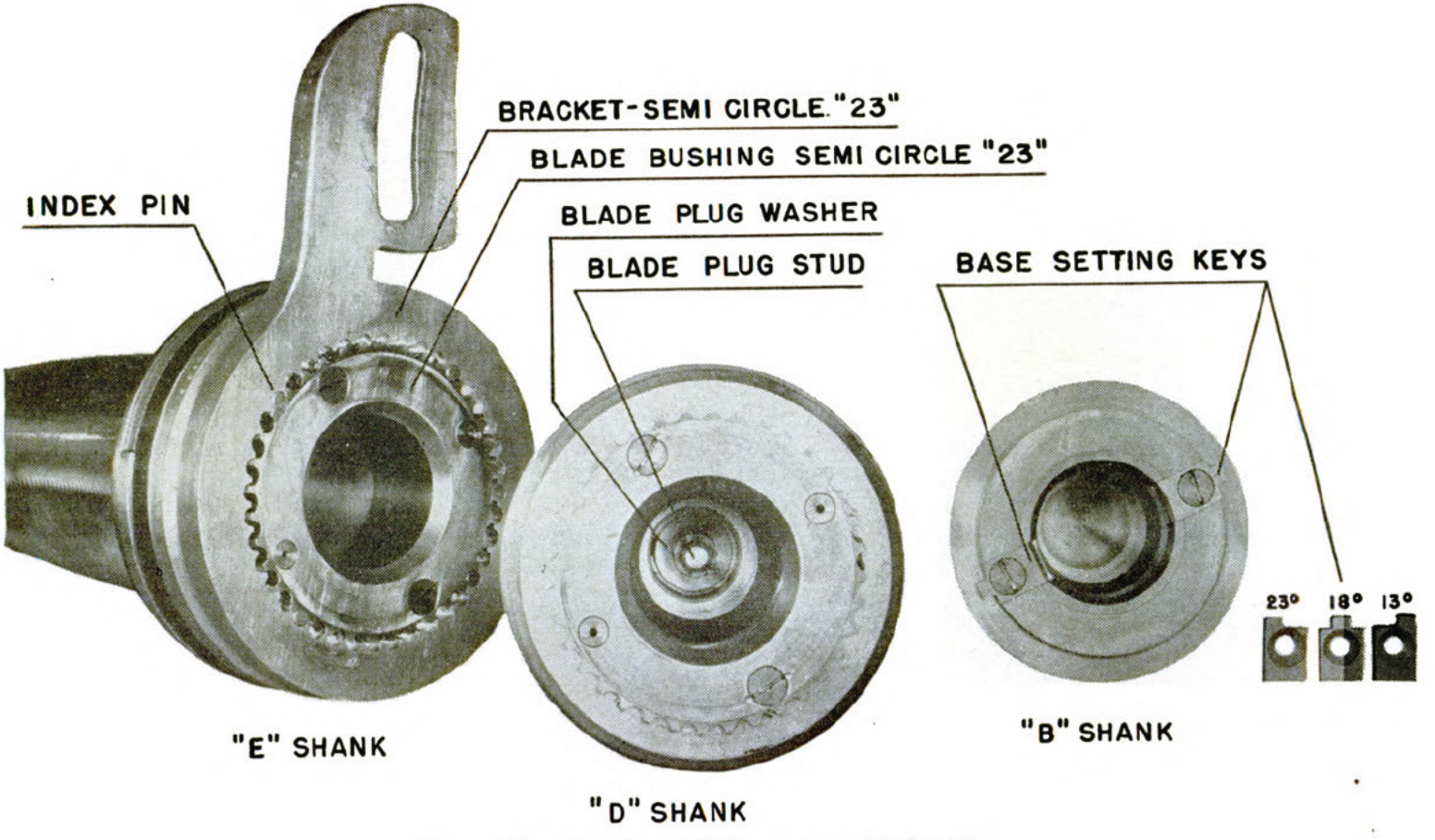

Figure 17.—Counterweight brackets and index pins.

On the *B* shank blades the brackets are indexed to the blades by keys (two for each blade), also illustrated in figure 17.

The *E* shank blade is shown with its counterweight bracket indexed to a base setting of 23°. The semicircular holes in the bracket are numbered, and the holes in the blade bushing have corresponding numbers. These numbers indicate BLADE ANGLE at 42 inches radius. To index, move the bracket around on the butt of the blades until the desired numbers coincide. Then insert an index pin at that point and additional pins at the three other points where the holes coincide (90° apart.) When you're facing the butt of the blade, the base setting is INCREASED one degree by placing the index pins in the next set of semicircles to the LEFT. If they are placed in the set of semicircles immediately to the RIGHT, the base setting is DECREASED one degree.

Always use the index pin to aline the semicircles on the bracket and bushing whose numbers correspond to the desired base setting. This base setting is stamped on the lead fillet of the counterweight, and should be CHANGED to correspond with any relocation of the index pins.

INSTALLATION

If it's your job to put the propeller assembly on the nose of the airplane, here's how you go about it. Remove the screw plug from the propeller oil feed line inside the crankshaft. Install the correct engine shaft oil plug or oil supply pipe. Dress off all corrosion, galling, scores and scratches on the crankshaft and install bronze rear cone on engine shaft, against the thrust nut.

Now install the split front cone on the propeller piston. The cylinder and piston should be removed from the propeller for this installation,

because the front cone cannot be installed without moving the cylinder out toward low pitch, and any movement of the cylinder before the piston is screwed on the crankshaft, tends to cock the assembly. This makes it difficult to start the piston on the crankshaft and may cause damaging to the crankshaft threads.

The cylinder and piston can be removed by unscrewing the counterweight caps, taking the adjusting screws out of the cams in the counterweights, removing the counterweights, and unscrewing the counterweight bearing shafts. Be careful in removing the adjusting screws not to disturb the position of the nuts.

Oil the crankshaft and rear cone. Then, put the propeller on the crankshaft. Assemble the cylinder, piston, snap ring, and front cone. When placing this assembly on the crankshaft, be sure that the numbers above the cylinder bearing shaft bushings correspond to the adjacent counterweight brackets. Next, screw the piston on the crankshaft, making SURE that the piston and crankshaft threads are in perfect alinement. NEVER USE FORCE to tighten the piston if there is binding or an indication that the threads are not properly started. If you do, you'll have serious trouble on your hands. As the piston is turned on the crankshaft, the oil supply pipe in the engine shaft is forced through the gasket at the base of the piston.

Tighten the piston on the crankshaft. Use the propeller wrench and a bar about 4 feet long, and apply a force of approximately 180 pounds at the end of the bar. To make certain the piston is being pulled home, the bar should be rapped once on the section next to the wrench. Use a normal swing with not more than a 2½-pound hammer, and strike the blow while force is being exerted at the end of the bar. This operation should be

repeated after the first flight, and another check made at the end of 25 to 50 hours to see that the piston is tight.

CAUTION—DO NOT ATTEMPT TO TIGHTEN THE PISTON BY HAMMERING ON THE END OF THE BAR.

Snap the snap ring in place, and install the two piston gaskets (the one having the longer flange is the inboard gasket). Install the counterweight-bearing-shaft thrust-bearing bushings. This assembly consists of two circular races and a ball thrust retainer. The race with the smaller inside diameter is the inner race, and should be installed in the cup first.

Place the counterweight bearing races, retainers, and cap races in the brackets. Slip the circular oilite washers between the outer race of the cylinder-bearing-shaft thrust-bearing assemblies and the arm of the brackets. Screw the bearing shafts in their corespondingly numbered holes. It is essential that the grooves in the counterweight races match the bearings in the counterweight retainer. The curvature of this bearing is gradual. To make positive that the cap races are not assembled upside down, an arc is stamped on the outer face, indicating the direction of the bend in the grooves. After the bearing shaft has been screwed up tight, this arc should be checked.

Lock the bearing shafts in the cylinder with the bearing shaft clevis pins, and cotter the pins. Slip the spacers into place in the counterweight bracket slots, and assemble the counterweights, making sure that the number of each corresponds to its bracket. Install piston gasket nut and tighten. Use a bar approximately 2 feet long with the wrench. Place the cylinder head gasket on the cylinder head. A light coating of grease will hold this gasket in place.

Now screw the cylinder head on the cylinder. This should be tightened with the bar used on the piston gasket nut. Lock the cylinder head with its lock ring. Place the adjusting screws in the counterweights, being CAREFUL not to disturb the adjusting nuts. Screw the counterweight caps, making SURE that the number on each corresponds with its bracket. Put in the counterweight cap clevis pins and cotters. Then, as your FINAL STEP in installation, check all lockwires and cotters.

CHAPTER 3

THE CONSTANT-SPEED PROPELLER

EFFICIENCY EXPERT

The CONSTANT-SPEED propeller is a first cousin to the two-position controllable propeller. In fact, any two-position propeller can be turned into a constant-speed propeller by the addition of an AUTOMATIC CONSTANT-SPEED CONTROL—a device which automatically maintains the engine rpm constant at any speed you select. It simply changes the blade angles automatically to meet new conditions of altitude, airplane attitude and throttle setting. But it doesn't interfere with the independent setting of engine power at any time.

Both the constant-speed and the two-position types of propellers depend on counterweights and hydraulic oil pressure to do the blade-shifting job. The blades of the constant-speed, however, will be at any angle of pitch, from full low to full high. The two-position, of course, cannot be set at intermediate angles between high and low. What this greater range of pitch means in terms of performance is illustrated in figure 18.

614785°—44——4

One of the advantages of the constant-speed, as you see in the diagram, is faster climbing ability. Notice that an airplane equipped with a constant-speed propeller climbs to a given altitude in 8 minutes whereas an airplane with a two-position propeller requires 10 minutes to climb to the same height. As for an airplane with a fixed propeller, it's in the "also-ran" class when compared with the constant-speed.

Another advantage of the constant-speed propeller over the other two types is that it permits power descent without overspeeding the engine.

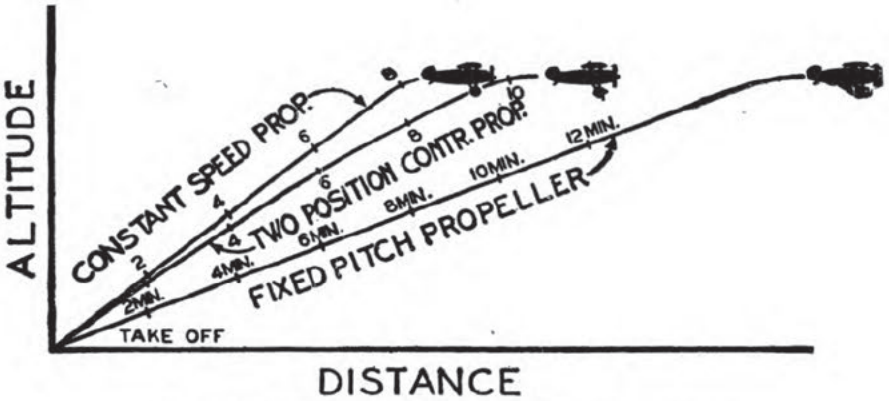

Figure 18.—Comparative airplane performance.

As the air speed increases, the constant-speed control increases the blade angles to higher pitch, holding the engine rpm constantly at the desired speed.

If you set the constant-speed propeller control to give, say, 1,900 rpm, the engine will be kept at that speed within certain limits. The same will be true at any rpm setting selected. If the throttle is opened, the propeller blade pitch is automatically increased. Thus, although the engine is producing more power and dragging the airplane through the air faster, the rpm remains the same. On the other hand, if the throttle opening is decreased, the propeller pitch will auto-

matically decrease, and the engine will still turn at the same rpm as before.

The improved performance made possible by the use of constant-speed propellers is most noticeable in the case of high-powered airplanes, especially when they are equipped with supercharged engines. On super-power engines, higher pitch settings are needed at all times (except at take-off). This is particularly true when reduction gearing is used between the engine and the propeller. This range between low and high pitch, therefore, is too great for a two-position propeller control to handle.

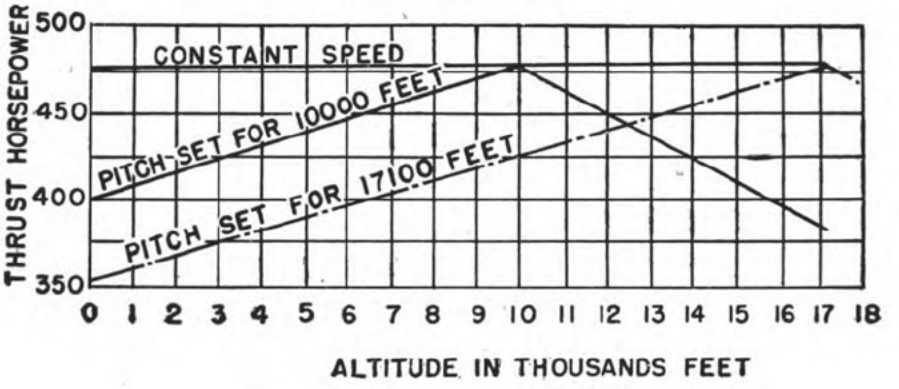

Figure 19.—Thrust horsepower.

Constant-speed propellers not only have the ability to hit each degree of pitch on the scale, but generally have a 10° wider range than the two-speed between full low and full high. Thus, if there are 10° difference between low and high pitch on a two-position, the corresponding constant-speed will have 20° difference between extreme settings. And that wider range means better control of available horsepower.

In figure 19 you have a diagram showing the difference between thrust horsepower when using each of the three types of propellers—fixed, two-position, and constant-speed—on the same airplane and engine. Incidentally, THRUST HORSEPOWER is

the measure used to indicate the pulling power of a propeller, and is not the same thing as engine horsepower.

Take a look at the lowest curve on the chart, starting in the lower left corner. This curve shows the thrust hp available with a fixed-pitch propeller set to give cruising engine rpm at 17,100 feet altitude, with full throttle, in level flight.

Notice that at sea level (0 altitude) this propeller develops only 350 thrust hp. At 10,000 feet, it has developed 425 thrust hp. It isn't until the airplane has reached 17,000 feet altitude that this propeller develops 475 thrust hp.

Now look at the middle curve which shows the thrust horsepower you can get from a two-position propeller adjusted to give cruising rpm at 10,000 feet altitude under similar conditions. Note that 400 thrust hp is available at sea level, 475 at 10,000 feet, and then, as the ship climbs over 10,000 feet, the thrust horsepower falls off sharply. At 12,000 feet, the output has dropped to 450, and at 14,000 feet, it's delivering only 425. When the airplane has reached an altitude of 17,000 feet, its delivery of thrust horsepower has fallen back almost to the output at sea level.

But the third curve, marked "Constant-Speed," is horizontal, showing that smooth 475 thrust hp is available from sea level up to 17,000 feet altitude.

The basic parts of the constant-speed propeller are the same as those on the two-position controllable pitch propeller, with the addition of a constant-speed control unit.

The constant-speed control, seen in figure 20, is a type of GOVERNOR UNIT, mounted on the nose section of the crankshaft. The unit is coupled to the engine by a suitable gearing to insure that its operating range coincides with the engine rpm

range. The unit has a simple GEAR PUMP to boost the oil pressure, which in turn shifts the pitch of the blades.

The other parts of the governor unit include the RELIEF VALVE ASSEMBLY (controlling the maximum governor oil pressure), the PILOT VALVE (designed to equalize the pressure forces of the oil), the CONTROL SHAFT ASSEMBLY, the FLYBALL ASSEMBLY and GASKETS.

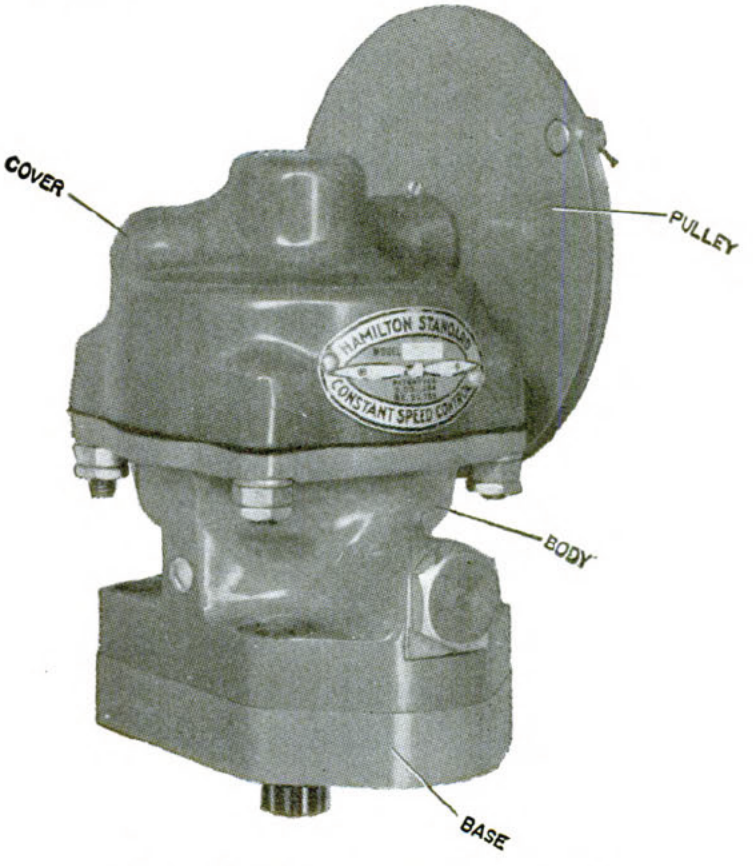

Figure 20.—Constant-speed control unit.

You can examine these parts in figures 21 and 22.

The model of the Hamilton Standard Constant Speed Control is designated by a series of numbers and letters which refer to the head, body, and base of the governor and indicate the design of each. This designation is always located on the "trademark plate" which is fastened to the head or to the base.

There are six positions in which the numbers and letters can be inserted, three appearing before the dash and three after the dash, as shown by the following:

1st position	2d position	3d position	1st position	2d position	3d position
(1)	(A)	(1)———	———(A)	(5)	( )

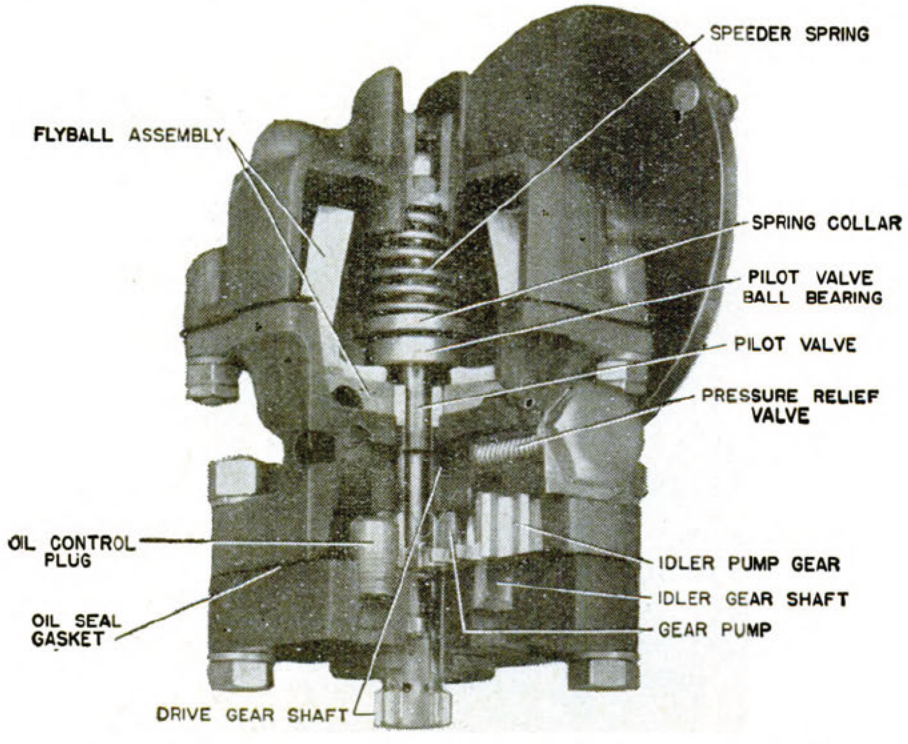

Figure 21.—Front view of constant-speed control governor unit.

Of the three positions appearing before the dash, the first is always a number and it refers to the type head assembly used. The second is always a letter which designates the type body assembly used, and also the range of the governor. The third is always a number which designates the type base assembly used.

Each position appearing after the dash refers to the corresponding position in front of the dash, and indicates any modifications to which the head, body, or base assemblies have been built. For example, in the first position after the dash there

appears a letter. It refers to the first position before the dash and indicates the alteration from the standard head assembly to which the control is built. The second and third positions after the dash indicate deviations from the standard body and base assemblies, respectively.

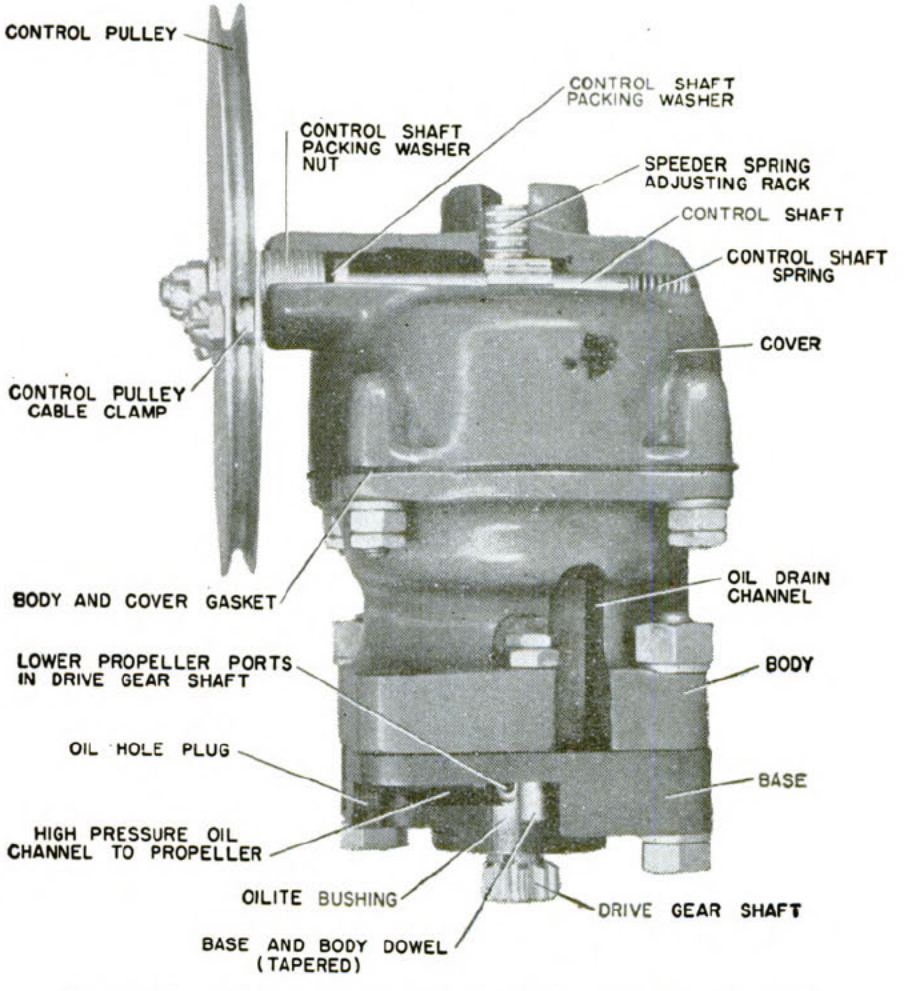

Figure 22.—Rear view of constant-speed control governor unit.

Here is a typical illustration:

MODEL 1A1–A5

This governor consists of a type 1 head altered to modification A, and called a 1A head. A type A body altered to modification 5, and called an A5 body. And a type 1 base which has not been altered, and is called a 1 base.

From this it is seen that, if no modifications are made to the head, body, or base, then the second group is entirely omitted. If the body is the only part not modified, the body designation is shown with an "0" modification. For example, in the model 1S10–GOA, the head is type 1G, the body is type S, and the base is type 10A.

HOW IT WORKS

You'll recall from earlier discussions that the pilot uses a hand control to set two-position propeller blades to either low or high pitch. With the constant-speed propeller, he also has a hand control. Once the pilot has selected the engine speed he wants, and sets the control accordingly, he can forget about it until he wants some other engine speed. The control unit takes care of changing the blade pitch as needed to keep the engine speed where the pilot wants it.

Suppose, for example, you want the engine to operate at 1,900 rpm, and set the control for that many revolutions. If the engine revolutions fall below this speed, the governor unit gets busy. If the revolutions of the engine go above 1,900 per minute, the governor unit again goes into action and increases the blade angles until the engine again makes 1,900 rpm.

In figure 23, you see the governor unit with some of its covering removed to show its insides. Notice the oil pump. The job of this pump is to take the engine oil and boost its normal pressure 200 to 300 percent or up to about 180–200 pounds per square inch (psi). Although this is considerably more pressure than is needed to shift the pitch of the blades, the excess pressure does no damage and is there in case it's needed. There's a pressure relief valve just above the gear pump to maintain this higher pressure.

At the top left-hand corner of figure 23 is a detail sketch of the gear pump, showing the two gears which receive the oil from the engine, by

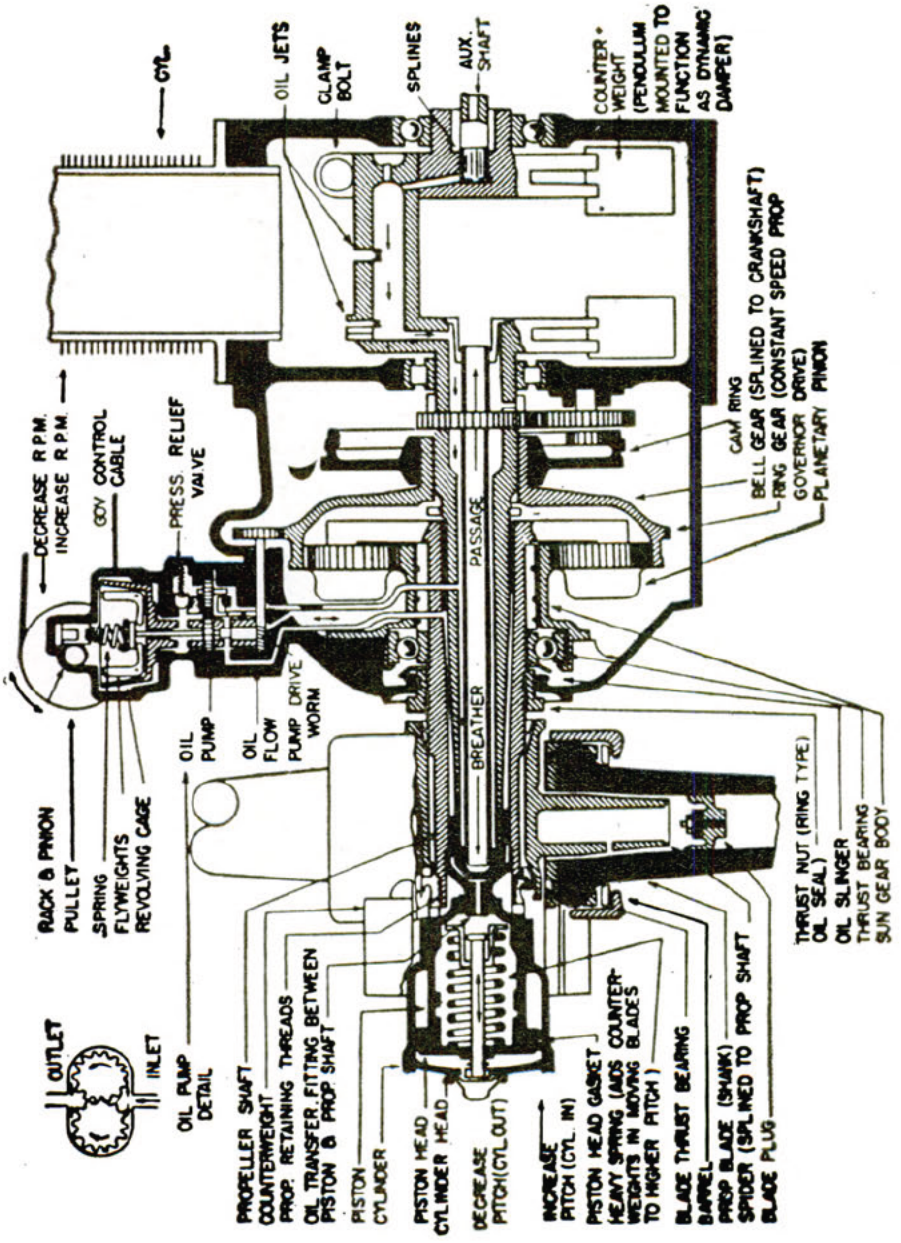

Figure 23.—Diagram of propeller and governor unit.

way of the INLET, and pass it along to the propeller cylinder via the OUTLET under increased pressure.

Just below the pump there's a pilot valve (not labeled in the diagram). The high-pressure oil from the gear pump fills the space between the

necked-down section of the pilot valve and the drive gear shaft. The pressure relief valve is spring-loaded, and serves as a backstop for the oil.

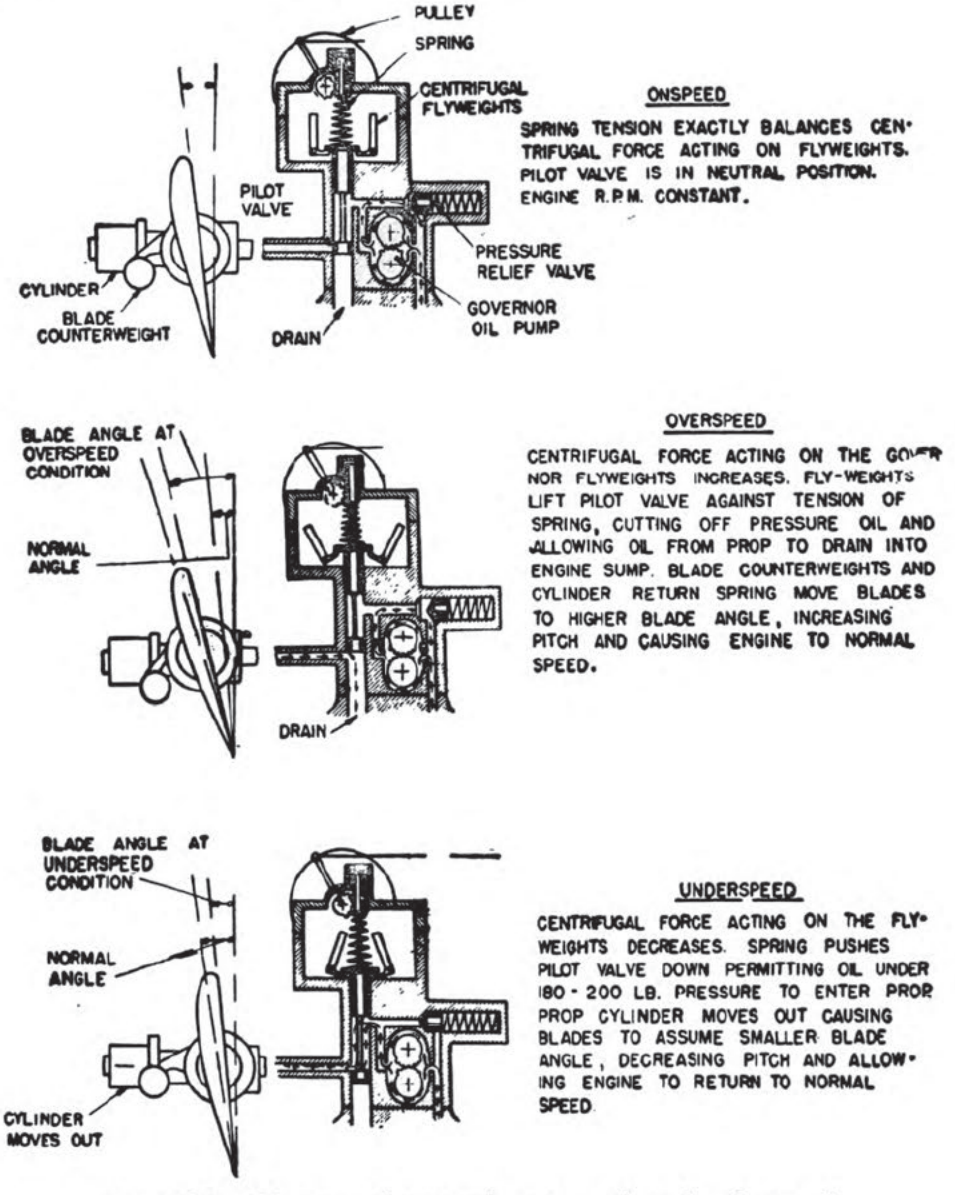

Figure 24.—Diagram of onspeed, overspeed, and underspeed.

Now look at figure 24. Whenever the airplane engine is running, the flyweights in the revolving cage near the top of the governor unit whirl around. If the engine and propeller are in balance, the propeller is ONSPEED, and the unit idles,

as in the top sketch. The flyweights are in balance, the pressure and drain ports are all closed, and the oil from the gear pump is by-passed through the relief valve back to the inlet side of the pump.

But what goes on when the engine is turning faster than the pilot wants it to turn? Such a condition might result, for instance, when an airplane is nosed down into a dive, or when the throttle is opened rapidly. The unit is then in an OVERSPEED condition, as shown in the center sketch. What then takes place happens in less time than it takes to tell it. At the top of the sketch, below the pulley, you'll see a spring called the RPM SPRING. To the right and left sides of this spring are shown the flyweights, or flyballs, which are driven by the engine. If the engine goes fast, the flyweights speed up. If the engine goes slowly, the flyweights slow down. The flyweights and the rpm spring are just in balance when the engine is onspeed.

But now the engine is not onspeed. It's overspeed. That means the flyweights are swinging around faster than the speed for which the spring tension has been set. So the flyweights tend to fly outward and cause the spring to compress upward.

As the spring moves up, the pilot valve also moves up. And as the valve moves up, it uncovers the propeller port, shown at the left near the bottom of the sketch, and allows the oil to run out of the propeller cylinder and down into the sump. As the oil drains out of the propeller cylinder, the cylinder moves in on the piston, and the centrifugal force on the counterweights on the propeller blades increases the blade pitch.

As soon as the pitch has reached the point where the propeller is stabilized and is allowing

U. OF I

the engine to turn over at the desired rpm, the ONSPEED condition shown in the top sketch is reached. The spring tension and flyweights balance, the pilot valve closes the port, and the propeller and engine are together again.

Now look at the third sketch. Here the constant-speed control unit is operating to stabilize the propeller of an engine that's running UNDERSPEED.

The greater the tension of the rpm spring, the faster the flyweights have to rotate before they can compress the spring upward. When the flyweights don't rotate fast enough to compress the spring, the spring forces overcome the force of the whirling flyballs and the spring moves down. In so doing, it moves the pilot valve down.

Again the pilot valve uncovers the propeller port, only this time the downward motion closes the drain to the sump. At the same time it opens the port from the booster pump into the pilot valve and allows oil from the booster pump to be forced into the propeller cylinder. The cylinder moves out on the piston, the blade angles are reduced, the propeller becomes stabilized, and there you are.

Incidentally, the same oil is used over and over for the constant-speed mechanism, drawing on the engine lubrication supply only when the quantity of oil in the mechanism isn't sufficient to do the job. This oil economy is the result of the following operation—

When the oil pressure builds up to about 180 psi, the relief valve opens, allowing some of the oil to circulate around the pump and come back into it again on the low-pressure side. Thus, there's always a basic supply of oil within the unit to keep a normal balance.

The following rule applies to all constant-speed propellers and it's worth remembering—

> In every controllable propeller adjustment for the initial flight, the LOW PITCH should be set HIGH enough so that the airplane can stay in the air safely even if the propeller should fail to adjust beyond full low pitch after taking off. Similarly, for the initial flight, the HIGH PITCH should be set LOW enough so that the airplane can operate safely even if the propeller should shift to high pitch and remain there.

The safety of the airplane and the lives of the crew may depend on the observance of this practice. So fix it in your memory as one of the things you know for certain about constant-speed propellers. As a matter of fact, this precaution applies to two-position controllable propellers as well as to constant-speed. But it's especially important with the constant-speed because the working pitch range is greater.

What should the range be? That will depend on the type of airplane and the desired performance. A propeller with a 20° pitch range is commonly used for high-performance airplanes with supercharged engines, while a propeller with a 10° pitch range is adequate for general use. It is unnecessary and undesirable to use a pitch range greater than actually needed. You may sometimes hear about the wonderful improvement in cruising efficiency when a propeller has been set beyond the limits specified in service bulletins. Don't be fooled by such scuttlebutt.

Parts for counterweight-type two-position controllable propellers and constant-speed propellers are practically interchangeable. On both the two-position and the constant-speed, by changing the

angle at which the counterweights travel and the slope of the counterweight cams, the blade range may be varied. By an interchange of counterweight brackets, ranges of 6, 8, 10, 15, and 20° can be obtained. The weights are adjusted by means of adjusting screws like the one shown in figure 25.

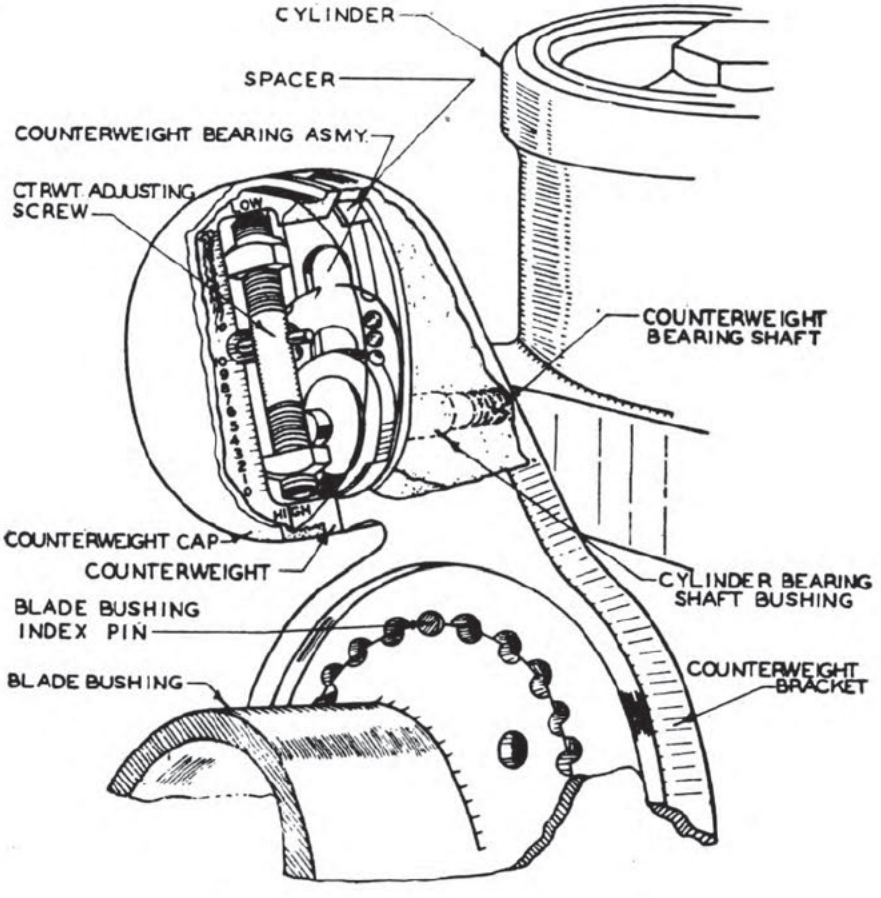

Figure 25.—Adjusting screw assembly.

When a range of 20° is desired, an additional spring assembly must be used to help the counterweights return the blade to high pitch. It is because of the increased angular travel of the counterweights and the slope of the counterweight cams that the spring assembly is needed with 20° range propellers.

Some propellers may be fitted with a slinger

ring-type de-icing device like the one shown on the hydromatic propeller in figure 26. A tube which leads the de-icing fluid from the slinger ring onto the blade shank is fitted over the barrel bolt at the edge of each blade. A small feeder tube is mounted on the two bottom studs of the engine thrust plate to lead the de-icing fluid from the de-icing pump to the slinger ring. Once the fluid

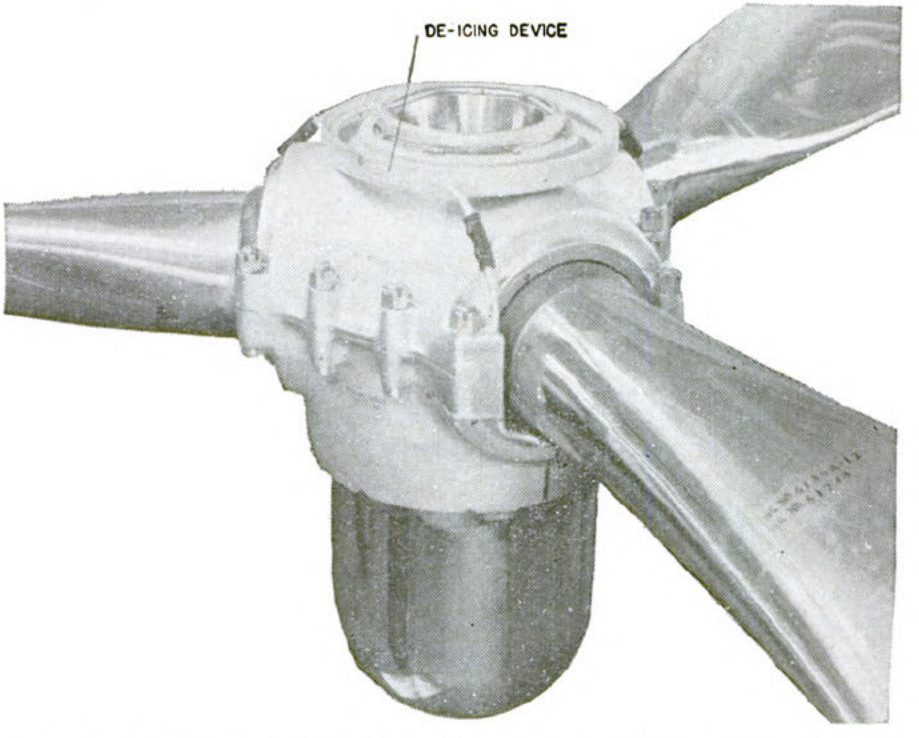

Figure 26.—Slinger ring type de-icing device installed on hydromatic propeller.

has been deposited in the slinger ring, it is thrown out by centrifugal force through the bracket and nozzle assemblies to the blade shanks.

You can see the parts of the de-icing device in figure 27. The slinger ring is mounted on the rear barrel half, and secured by screws. A bracket and nozzle assembly is attached to the leading edge barrel bolt at each blade, and connected to the slinger ring by hose couplings. These couplings and the attaching screws are wired in place. The feeder tube is mounted on the two bottom studs

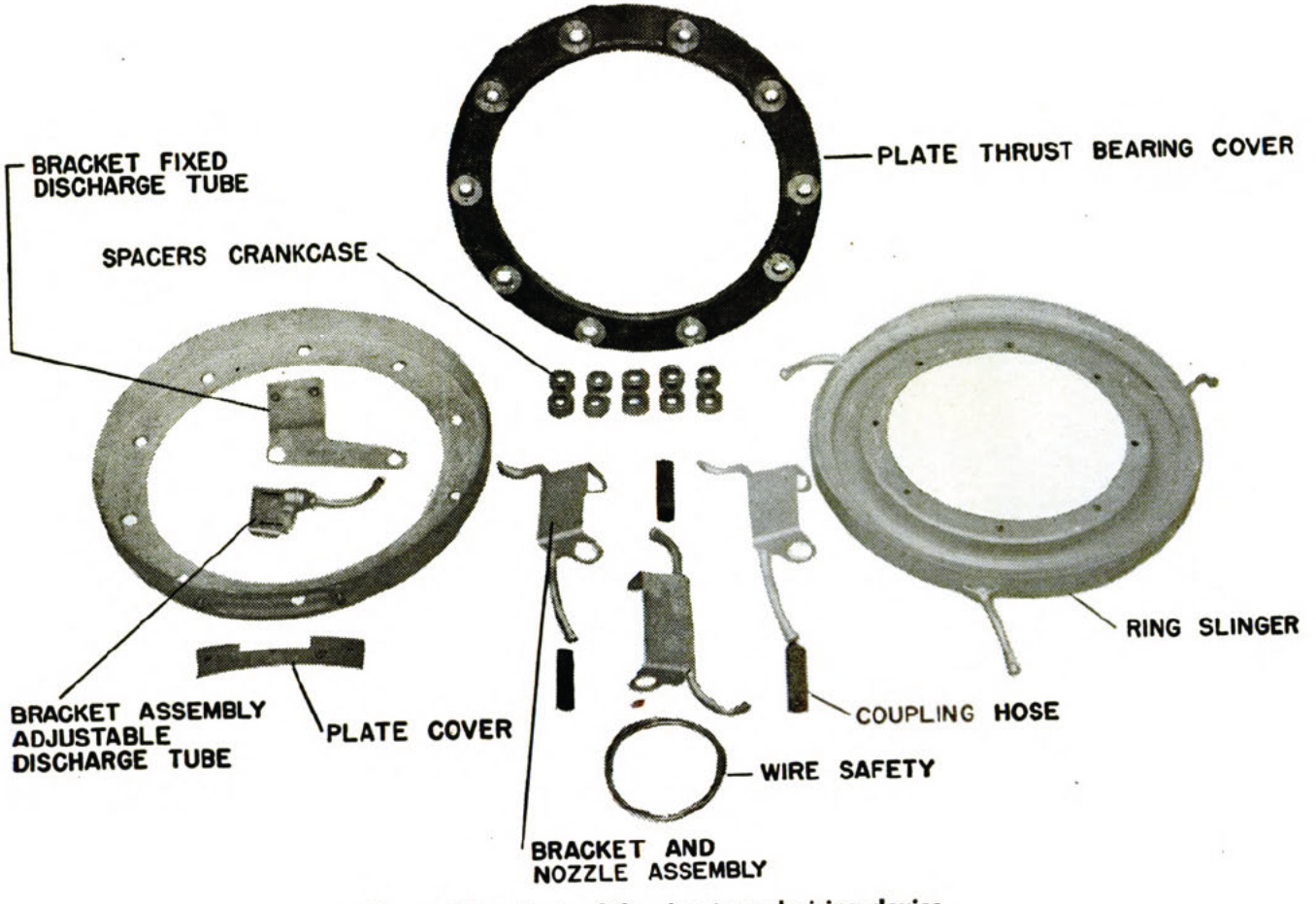

Figure 27.—Parts of the ring type de-icing device.

of the engine hose thrust plate and connected to the supply line from the de-icer pump.

REMOVAL

Before you start to remove one of these propellers, move the blades toward the full high-pitch position until the pitch is within 8 degrees of the basic index setting of the propeller just as you did with the two-position controllable propeller. This will remove all compression from the springs. Be sure, however, that the blades aren't more than 8 degrees away from the base setting or else the springs will be under compression and the threads of the clamp nut may be stripped when it is unscrewed.

Remove the clamp nut lock ring and unscrew the clamp nut. Then remove the lock plate and the clamp nut gasket. Failure to remove the lock plate before attempting to unscrew the cylinder head will seriously damage the puller bolt. Remove the cylinder head lock ring and unscrew the cylinder head. Unscrew the piston gasket nut and take out the spring assembly. Remove the two piston gaskets by changing the pitch, and unscrew the piston.

Remove the propeller from the crankshaft. Take care not to damage the engine shaft threads. When you come to remove the governor unit, disconnect the cockpit control from the unit. On units having external piping, disconnect the pipe connection. Remove the four mounting stud nuts, and that will make it possible for you to remove the constant-speed control unit.

DISASSEMBLY OF GOVERNOR

Here's how you go about disassembling the governor.

Remove the four nuts and palnuts which hold the cover and body sections together. Life off the cover section, being careful not to bend the spring collar spindle. Pull the pilot valve straight out of the drive gear shaft. Carbon, formed in the drive gear shaft above the operating range of the pilot valve, may cause the pilot valve to stick. A little solvent will free the valve, making it easier for you to remove it. Remove high rpm stop pin from the pulley. Then remove the pilot valve from the cover section by turning the control shaft in a counterclockwise direction. Remove the snap ring which holds the flyball assembly on the drive gear shaft and lift off the flyball assembly.

On all units, except those having Model 1 bases, the base and body sections are held in alinement by four studs. This means of alinement is not used with the Model 1 base. Instead, two dowel pins and a tapered pin are used to locate the base accurately on the body. This tapered pin also serves to hold the base and body sections together when the unit is not mounted on the engine. Before removing Model 1 bases, be sure to remove the tapered pin. This pin is located on the side of the unit opposite the relief valve, and a special clamp is used in removing it.

Now you can remove the base from the body. On all bases, this is most easily done by tapping on the upper end of the drive-gear shaft. First, be sure, however, that the tapered pin has been removed. Lift the drive-gear shaft and idler gear from the base section. The idler-gear shaft need not be removed unless it is worn. Unscrew the relief-valve plug and remove the spring and the plunger. Disassemble the pilot-valve spring-collar-speeder spring assembly. Remove the self-

locking fibre nut and pilot-valve nut from the spring-collar spindle.

Lift off the rack, speeder spring and speeder-spring spacer. Remove the cotter and unscrew the pilot valve from the spring collar. Don't bend the pilot-valve-spring-collar assembly. Remove the pilot-valve ball bearing. This fits on the pilot valve and may be tapped off.

It is seldom necessary to take the pilot valve off the spring collar. It's done only when the pilot-valve ball bearing is to be replaced. In case the spring-collar spindle is bent or the threads are worn, the complete pilot-valve spring-collar assembly must be replaced because the cotter hole in the pilot valve is drilled after the spring collar has been fitted. In other words, the hole is tailor-made.

Remove the control-shaft assembly from the cover section. Take out the cotter key and unscrew the control shaft packing washer nut. Then pull out the control shaft, packing washer and spring.

INSPECTION AND REPAIR

No Saturday night baths for the constant-speed control. It is a self-contained unit continually working in an oil bath. Consequently, it doesn't get very much wear. Between overhauls, about the only inspection necessary is a visual examination to see that there are no external oil leaks and that the control system is free from lost motion. In cases where external piping is required, be sure that the high pressure oil line is securely mounted and not subjected to excessive vibrations, which might cause failure. Maintenance at overhaul periods consists mainly of cleaning the unit.

The following table illustrates some of the defects you may find and what should be done about them.

Part	Defect	What To Do
Pilot-valve base bearing	Worn	Replace
Spring-collar threads	Worn by pilot-valve nut	Replace pilot-valve spring-collar assembly
Spring-collar spacer and oil-pressure relief-valve plunger	Scarred	Polish with fine emery and crocus
Idler-gear shaft	Side worn	Replace
Teeth of control shaft	Worn	Replace

The test-stand run-up of the unit will check the wear on the gear pump, the fit of the pilot valve in the drive-gear shaft and the oil-pressure relief valve assembly. The test-stand set-up apparatus consists of a mounting for the control unit (driven by a ½-hp motor), a supply of SAE No. 10 oil having the viscosity of engine oil at operating temperatures, a suitable oil-pressure gage, piping and valves.

Consult the latest specifications for complete details on governor testing.

Make a record of the data you find on a suitable form and file it with the parts list applying to each governor assembled. The unit must be carefully checked to insure that there are no external leaks. The point at which leaks are most likely to occur is at the joining surfaces of the mounting base and at the control shaft. Constant-speed controls which do not meet the stated requirements should be returned to the factory.

Of course, you realize that complete and detailed testing of the governor can be accomplished only at overhaul stations where proper testing facilities are available.

ASSEMBLY

The first step in the assembly process involves the control shaft. Assemble it in the cover section. Put the leather packing washer over the outer end of the shaft and slide it up against the shoulder flange.

Place the spring in the hole which locates the inner end of the control shaft in the cover. Insert the control shaft and install the control shaft packing nut, being sure to safety the nut with a cotter key.

Assemble the pilot-valve spring-collar speeder-spring assembly. Press the pilot-valve ball bearing in place on the pilot-valve stem. Next, fit the spring collar on the pilot valve, and safety with a steel cotter key. Then slide the spring-collar spacer over the spring-collar spindle, and place the speeder spring over the spring-collar spindle so that its large base is seated on the flange of the spring collar. Now, place the speeder-spring rack so that the top of the speeder spring bottoms on the threaded collar in the base of the rack.

Tighten the pilot-valve nut on the spring-collar spindle until it bottoms on the spring-collar spacer. Safety with the fibre self-locking nut. Place the drive-gear shaft in the body section, and mesh the idler gear with the drive gear. Install a new oil-seal gasket in the groove which is cut in the bottom of the body section. Place the base on the body section, and check to see that the unit is plugged (A. A. or B. B.) for proper pump rotation.

With Model 1 Base, alinement is secured by means of the two dowel pins located on either side of the nose section of the base and by the tapered pin. This pin also serves to hold the base and body sections together. After placing the base on the body section, install the tapered pin and the

tapered pin nut. On units having bases of other design, install the four nuts which hold the base and body section together. As the nuts are tightened, rotate the drive-gear shaft to be sure it is free and that the bearings surfaces in the base and body sections are in alinement.

Assemble the relief valve in the body. Place the plunger and the spring in the relief valve opening. Tighten the plug securely, and safety with the locking washer. Place the flyball assembly on the upper end of the drive shaft and lock it by means of the snap ring. Engage the teeth of the rack with those of the control shaft. Make sure the wide spline of the control shaft meshes with the wide tooth of the rack.

Place the cover section on the body. In doing this, care should be taken not to bend the pilot valve spring collar assembly. Secure the cover section to the body, and the unit will be ready to be placed on the test stand to check its proper balance and adjustment. After testing, palnuts should be installed.

Model 2 bases (35° angular mount) have a special intermediate unit drive gear. This gear has a female spline at the upper end, which fits the splined lower end of the drive-gear shaft. A 12-tooth angular gear at the lower end meshes with the gear on the engine drive. A ball bearing supports the lower end of this shaft. The unit drive gear assembly is removable by unsafetying and unscrewing the seven bearing-thrust cover screws which secure the bearing thrust cover to the base.

INSTALLATION

Installation of the constant-speed propeller is practically the same as the two-position controllable-pitch propeller—the only difference being in the governor unit. Here are the main things you

should keep in mind when installing that unit—

The clearance between the circular lining boss and the recess in the engine mounting pad should permit an easy fit. The circumference of the circular lining boss may be dressed down to obtain the dressed fit.

General freedom between the constant-speed control unit drive gear and the engine drive should be ascertained. This can be done by removing the cover section and rotating the flyball cup assembly to see that the original backlash is maintained as the mounting nuts are tightened. Excessive tightening may damage the gasket or warp the unit's boss.

As an additional precaution, turn the engine crankshaft to at least three different positions and check the backlash of the control at these points for free movement.

Before flying, it is important that the control system between the constant-speed control and the cockpit be adjusted to set the unit for rated rpm when the cockpit lever is 1/8 inch from its full forward position, and for positive high pitch when the cockpit lever is 1/8 inch from its full rearward position.

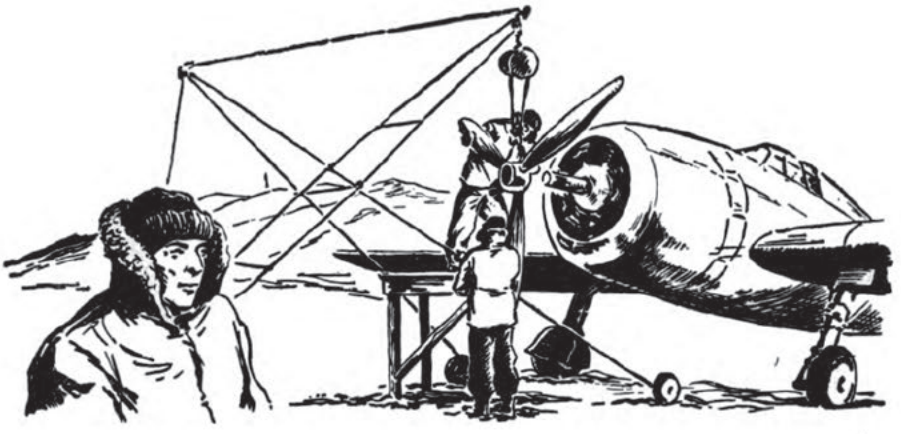

CHAPTER 4

HYDROMATIC QUICK-FEATHERING PROPELLER

WHY'S AND WHEREFORE'S

You remember from boat drill what is meant by FEATHERING an oar in rowing. The reason for feathering, as you know, is to reduce the air resistance, or DRAG, against the flat side of the blade as it moves through the air. And by reducing air drag, of course, you increase your speed.

Feathering an airplane propeller blade is exactly like feathering an oar. Where the average normal blade angle may be anywhere from 16° to 55°, the pitch of a feathered blade may be about 90°. Thus, instead of offering the broad side of the blade, so that its flat surface lies in the direc- a feathered propeller offers the leading edge of the blade, so that its flat surface lies in the direction of flight. This reduces the air resistance against the blades, and cuts down drag.

As you can guess, a dragging propeller is a headache for any pilot. Not only does it slow down the airplane, but it causes vibration that can do a lot of damage.

Another thing. A feathered propeller will prevent windmilling, which is harmful to the engine and interferes with maneuvering the airplane. Feathering keeps a propeller from turning the engine over as the air smashes against the blades in flight.

Figure 28 shows you how feathering can mean the difference between safety and a washout when flying a multi-engined airplane with a conked powerplant. With a feathered propeller, even that mythical Chinese flyer, Wun Wing Lo, might make a three-point landing.

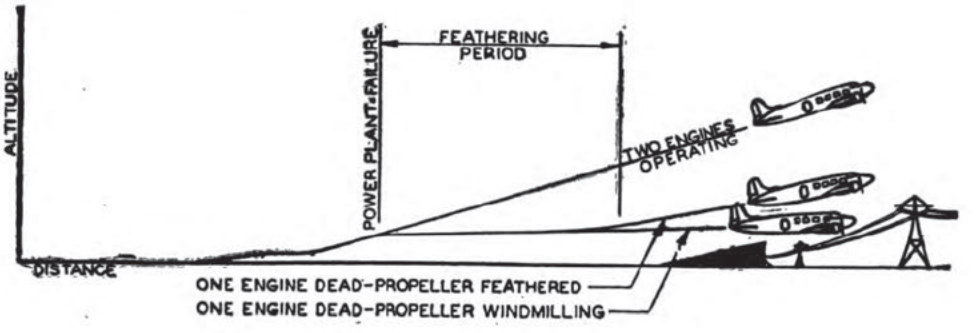

Figure 28.—Comparison of feathering and unfeathering.

In an emergency, feathering the blades makes it possible to stop engine rotation almost instantly. If a broken movable part, or some similar serious condition, is involved, the pilot can feather his hydromatic propeller without first having to reduce engine power or speed. You can see how this may mean the difference between a wrecked powerplant and a minor repair job on one part.

This ability of a feathered propeller to stop drag, vibration, and windmilling means an increase of ceiling, rate of climb, and speed for a multi-engined ship with a dead engine.

So, all in all, if you're in an airplane with a quick-feathering propeller, you have the edge over an airplane that doesn't have one.

On the other hand, if there is no need for feathering, the hydromatic propeller can be made into a nonfeathering propeller simply by adjusting the high-pitch stop to a specified top limit.

You'll discover as you go along that many of the principles of construction and operation of the hydromatic quick-feathering propeller are very similar to those of the counter weight-type constant-speed propeller. A hydromatic propeller could even be called a NON-COUNTERWEIGHT CONSTANT SPEED WITH A FULL-FEATHERING ADJUSTMENT.

What takes the place of the counterweights? The answer is—OIL. But the oil is under HIGHER PRESSURE now. How does it get that way?

The "brains" of this feathering outfit is a unit much like the counterweight constant-speed control. The hydromatic propeller retains the basic structural advantages of constant-speed propellers and, in addition, provides a means of feathering and unfeathering the propeller blades in flight.

The size, weight, and general shape of the hydromatic control are the same as that of the constant speed, as is the method by which the oil enters and passes through the gear pump and is delivered into the hollow portion of the drive gear.

BUT—the feathering hydromatic control has still another advantage. It has a high-pressure oil supply to use for feathering and unfeathering the propeller blades. A study of figure 29 will make it clear to you. The propeller is not equipped with blade counterweights or a cylinder spring assembly. The CYLINDER is movable on the controllable and constant pitch propellers. On the hydromatic, however, the cylinder DOES NOT move, but the PISTON IS movable.

The control unit consists of the same gear-type booster pump to raise the engine oil pressure to the pressure needed for the pitch-changing mecha-

nism. There's the same pilot valve to control the flow of oil to and from the propeller, and the same spring-balanced flyballs that operate from the engine driveshaft.

The relief valve plunger has been modified to permit the force of the relief valve to be supplemented by the force of engine oil pressure. This permits the relief valve to operate at a pressure equal to engine oil pressure plus the spring pressure. And a transfer valve has been provided in the base of the unit to provide for passage of the special high-pressure oil that does the feathering and unfeathering.

The UNDERSPEED condition, as shown in diagram *"A,"* exists when the speed of the flyballs has been reduced, and the spring force overcomes the force of the flyballs. In this condition the spring forces the pilot valve DOWN. The UPPER land of the valve moves below the metering port in the drive gear and cuts off the high-pressure oil. The LOWER land moves into the recess in the gear and opens the propeller line to drain.

When oil drains from the rear of the hydromatic propeller piston, the blades assume a lower angle and permit the engine speed to return to the original value. The flyballs and speeder spring in the control unit return to a balanced state as shown in the onspeed condition.

In the OVERSPEED condition, as shown in diagram *"B,"* the flyball speed has increased; their forces have exceeded the force of the speeder spring, and the pilot valve is RAISED. The upper land on the valve then opens the ports through which the high-pressure oil flows, and the lower land closes the drain. Since oil to the rear of the propeller piston increases the blade angle, the engine speed is thus reduced, and the flyball

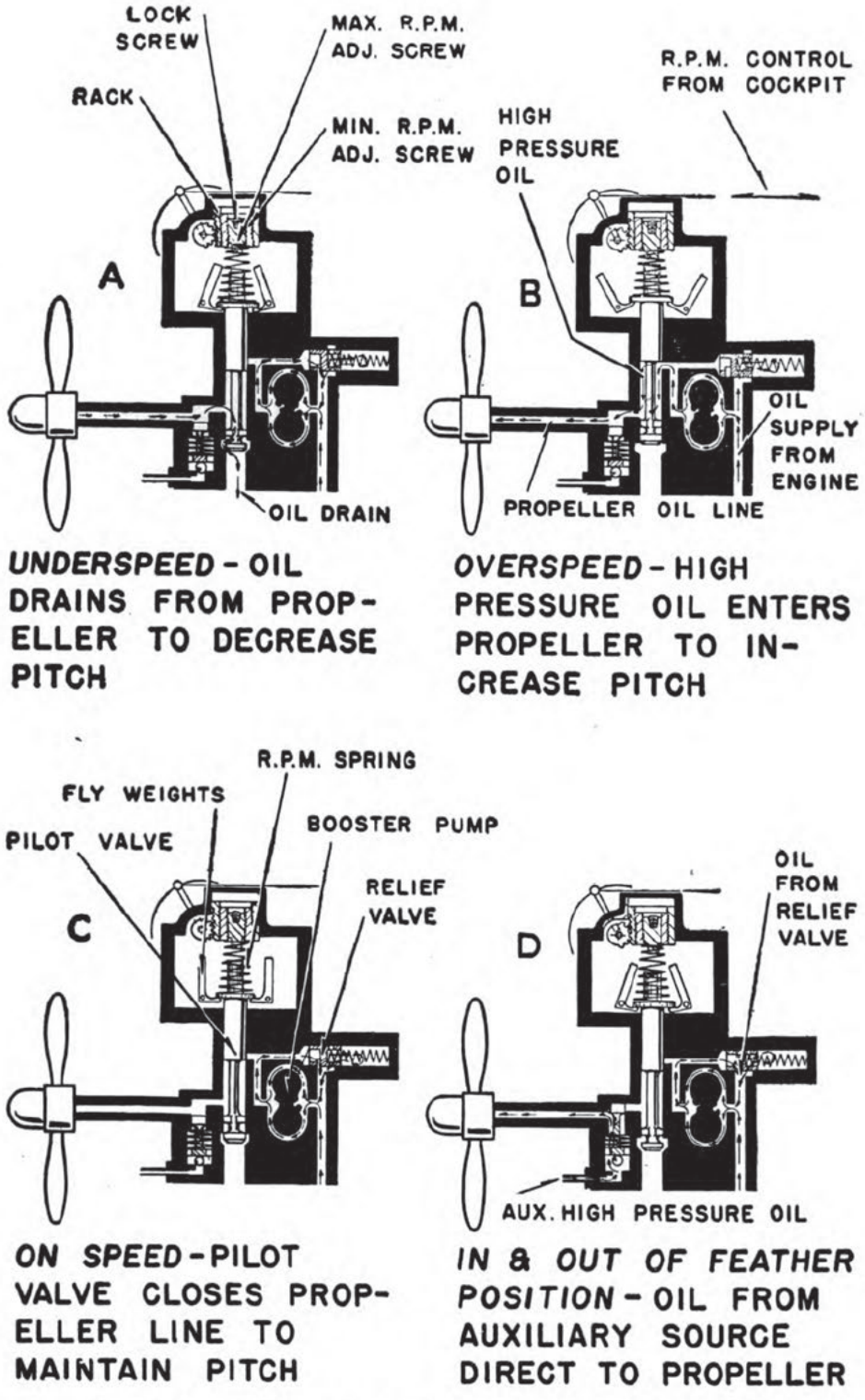

Figure 29.—Diagram of underspeed, overspeed, and onspeed.

spring forces a return again to a balanced state, as shown in the onspeed condition.

The ONSPEED condition, as illustrated in diagram *"C,"* exists when the flyball and spring forces are in balance. The pilot valve closes the line to the propeller and maintains a given blade angle. Both the pressure and drain ports are closed during this condition. All the oil from the gear pump is being by-passed through the relief valve back to the inlet side of the pump.

So far, the operation of this control unit closely parallels that of the constant-speed unit except for the movement of the pilot valve. Notice what happens at *"D."* During the feathering and unfeathering operations of the propeller, high-pressure oil from an AUXILIARY source is supplied to the propeller through a TRANSFER VALVE in the base of the constant-speed unit. The function of this valve is to cut off oil from the unit to the propeller and open the passages through the engine nose to the high-pressure feathering oil.

The VALVE ASSEMBLY consists of a PLUNGER, a RETURN SPRING, and a BALL CHECK. The auxiliary high-pressure oil forces the plunger against the spring, as shown in diagram *"D."* When either operation is completed, and the pressure at the source of the auxiliary oil supply is reduced, the spring returns the ball to its seat and reopens the propeller line to the governor oil.

The minimum limit of the governing range is set by an adjustment of the minimum rpm ADJUSTING SCREW located within the speed-adjusting rack. The smaller end of the speeder spring is seated against the low rpm adjustment.

As shown by the illustration, the low rpm adjustment is threaded into the speeder spring rack. With this type of construction it is possible to set the minimum rpm adjustment in an infinite num-

ber of positions in relation to the speed-adjusting rack.

The minimum rpm is set by adjusting the low rpm adjusting screw in relation to the rack, so that when the rack is raised until it strikes the inside of the cover and is at its extreme position toward low rpm, there remains a minimum spring force which the flyballs will balance at some minimum rpm. If the flyball speed drops below the minimum, the action is the same as that already described under the underspeed condition.

The relief valve design interconnects the valve with the engine oil system. This valve is held closed by the force of the by-pass valve spring plus the force of the engine oil pressure on the area of the valve plunger. Such arrangement provides for a maximum pressure differential across the propeller piston equal to the relief valve spring setting, and thus the effects on the operation of the propeller due to variations in engine oil pressure in any one engine, or between engine types, are eliminated.

For blade designs of basic diameters over 12 feet 6 inches, it has been found necessary to increase the pressure differential across the propeller piston in which case a special relief valve spring is required.

Now a word about the construction of the hydromatic propeller itself. Like all the others, its foundation is the spider, barrel, and blades. Blades used with the hydromatic propeller are identical in basic design with those in the two-position controllable and the constant-speed propellers. They differ slightly in detail at the inner end, however, so they can't be interchanged. The blades are manufactured from high-strength aluminum alloy forgings and are of semi-hollow construction. This design allows the use of thin solid

tips of high efficiency and a strong hollow shank for attaching the blade to the hub.

There's an internal aluminum-bronze bushing incorporated in the shank. This bushing supports the blade on the spider arm and transmits the blade thrust and torque loads to the spider. The centrifugal blade load is also taken by a part of this shank. To transmit the centrifugal load to the barrel, a ROLLER BEARING ASSEMBLY is used. This assembly is made up of two steel races, not removable from the blade, and a split type bearing retainer. To carry large forces with a minimum of friction, especially designed bearings are used. Between the inner bearing race and the blade butt you'll find a phenolic (plastic) sleeve. The purpose of this sleeve is to reduce the concentration of stress in the blade and also to eliminate chafing between the aluminum blade material and the steel bearing race.

The DOME ASSEMBLY is shown extended in figure 31. As you can see, it is a nesting of more or less intricate parts inside a bell-type cover. The main parts are the ROTATING CAM, the STATIONARY CAM, PISTON, and the SHELL. In addition, it houses the DISTRIBUTOR VALVE.

When the dome unit is installed in the hub assembly, the stationary cam is rigidly fixed in the barrel and provides support for the remaining parts of the dome unit. The rotating cam is supported by ball bearings which take the gear reactions and piston oil forces. The piston motion is transmitted to the rotating cam by means of four sets of cam rollers carried on shafts supported by the inner and outer walls of the piston.

In figures 31 and 32, you have a cutaway view of the DISTRIBUTOR VALVE. This part acts as a guide for the oil under two different pressures.

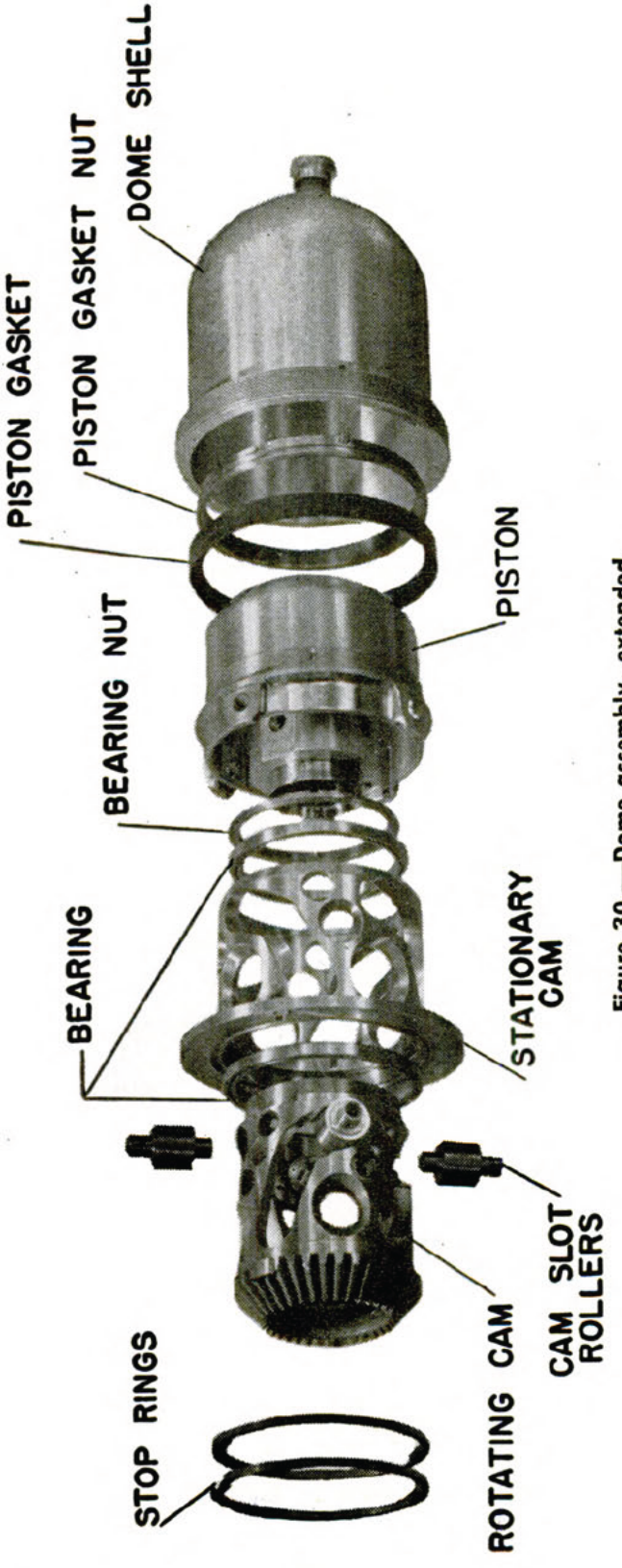

Figure 30.—Dome assembly, extended.

During constant-speed operation of the propeller, the distributor valve provides a passage through which engine oil, under BOOSTED pressure from the

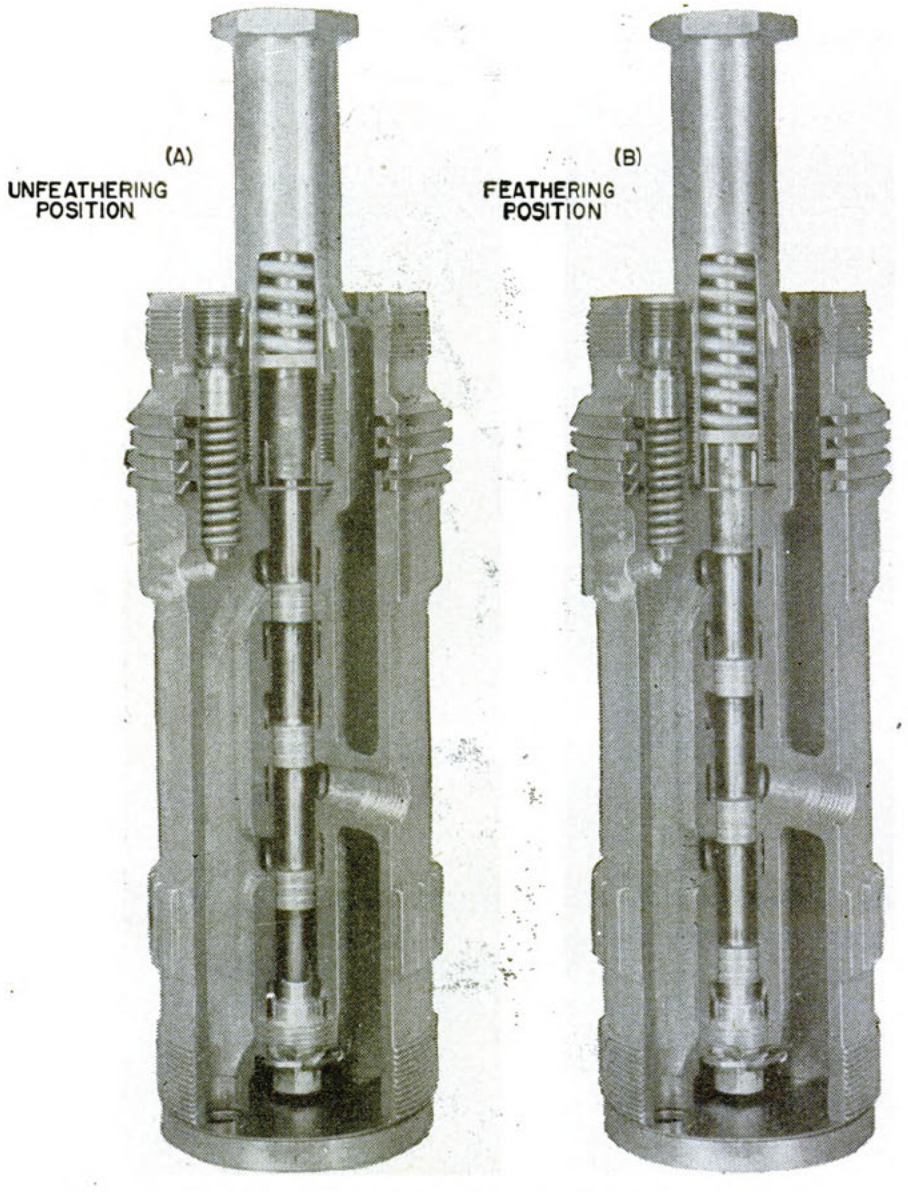

Figures 31 and 32.—Cutaway views of the distributor valve.

governor, runs to or from the INBOARD side of the propeller piston. Also through this valve, the oil under NORMAL engine pressure is conducted to or from the OUTBOARD end of the cylinder.

During feathering, the same two passages provide a channel for the high-pressure oil (from the auxiliary pressure system) to get to the INBOARD side of the piston, and a route for the oil from the OUTBOARD end of the cylinder to return to the engine lubrication system.

In (*A*), the distributor valve is in an unfeathering position. In (*B*), it is in a feathering and constant speed position.

Before you move along to further details, have a look at the construction of the governor unit. In figure 33, you see a cutaway of the governor unit with the main parts labeled.

The drive-gear shaft is steel and has the job of driving the gear pump and the flyball assembly. One end of this shaft has 12 splines to fit the engine drive coupling. This governor assembly operates whenever the engine runs. Above and below the spur gear portion of the shaft there are bearing surfaces. At each bearing there is an OIL PORT. The upper ports permit the high-pressure oil to enter the drive-gear shaft. The lower ports open to the propeller oil line. The steel idler gear is supported by the idler gear shaft, which is hollow and is made from cast iron. Cast iron is used to provide a satisfactory bearing surface for the idler gear. The pump gear wear is evenly distributed by using 13 teeth on the drive gear and 14 teeth on the idler gear.

The RELIEF VALVE ASSEMBLY consists of a bushing, a plunger, and a spring and plug with locking washer. The bushing is made from hardened carbon steel and is a press fit in the body. It acts as a guide for the plunger. The plunger is also made from hardened carbon steel, and has six small holes in the wall behind the web. These permit the force of engine oil pressure on the area of the plunger to supplement the force of the

relief valve spring. The vent into the flyball chamber from the rear of the relief valve is plugged to trap the engine pressure behind the valve.

Then there's the PILOT VALVE, which is made from case-hardened carbon steel. The upper and lower bearing surfaces are held to close tolerance limits. The upper end of the pilot valve is threaded to fit the spring collar. Between the

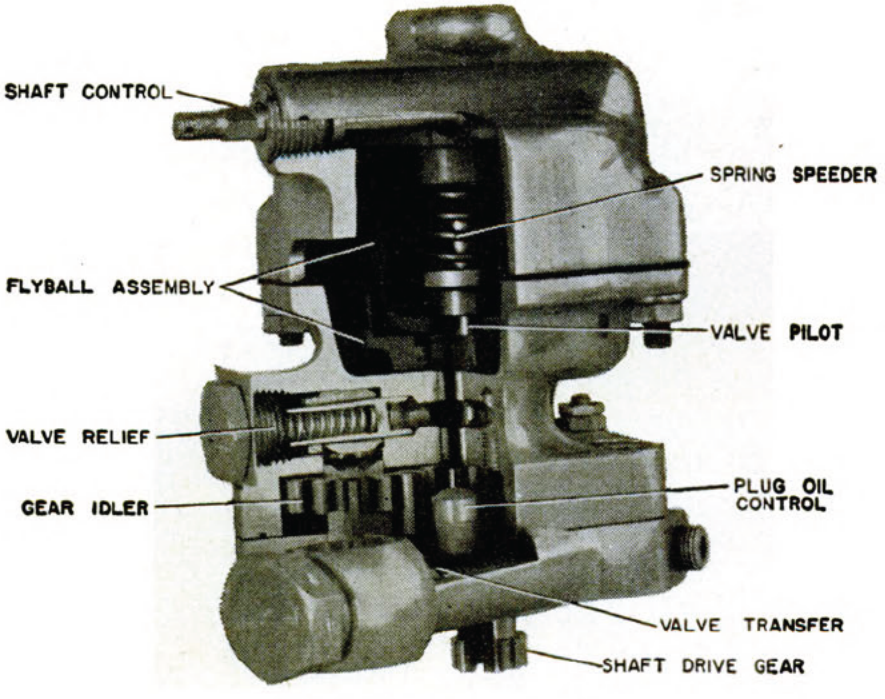

Figure 33.—Governor unit.

threaded portion and the upper bearing surface is the pilot valve ball bearing. The pilot valve is designed to meter oil to the pitch-changing mechanism as demanded by the governor.

Attached to the pilot valve is a SPRING COLLAR, made from a carbon steel which is not hardened. It is threaded at the lower end to fit the pilot valve stem. The flange at the base of the spring collar supports the base of the speeder spring and retains it in its seat.

A minimum rpm adjusting screw is threaded into the rack. This adjustment is, in turn, threaded into the speed-adjusting rack. After the relative positions of the three pieces have been adjusted to give the desired minimum rpm, the whole assembly is locked by tightening a small wedging screw in the upper end of the adjusting screw.

A stop for the high limit of the governing range of the unit is provided on the CONTROL PULLEY. It consists of a pin that can be located in any one of 18 holes in the pulley. The motion of the pulley is stopped when the pin comes to rest against an adjustable screw, threaded through a boss cast integral with the cover of the unit.

The FLYBALL ASSEMBLY consists of a flyball head, flyball-head cup, two flyballs, and two flyball-head hinge pins. The flyball head is designed to fit on the upper end of the drive-gear shaft. On the upper face of the flyball head are hinge-bracket-type flyballs attached by suitable hinge pins. A flyball head cup is spun on the flyball head and secured by two spot welds.

This cup has a mighty important job. It prevents any oil which might get into the head from exerting a pressure on the flyballs. This elimates excessive side loads and prevents any turbulence of the oil from interfering with the action of the flyball. The flyball assembly is cadmium-plated, and is held in place by a wire-snap-ring which fits in a groove at the top of the drive-gear shaft.

All constant-speed controls require a gasket between the cover and body section and another between the body and base sections. The body-cover gasket is of the conventional type. The oil seal gasket, between the body and base, is a rubber composition ring which fits in the groove milled in the lower surface of the body. This type of gasket is used because it is necessary to hold the

pump housing and clearances to tolerances which preclude the use of a standard type of gasket. The ring gasket permits a surface-to-surface fit of the base and body and at the same time furnishes a seal which is oil tight.

A governor of increased output was designed to meet the requirements for higher rate of pitch changes on some installations.

The capacity of the double-capacity governor-pump is nominally 16 quarts per minute, and the spring loaded valves are designed to handle this high capacity with no delivery to the propeller on low power input.

Basic model numbers are—

2 G 8	2 G 10	2 H 8	2 H 10
3 G 8	3 G 10	3 H 8	3 H 10
4 G 8	4 G 10	4 H 8	4 H 10

The general operating principles remain the same. The body and base assemblies have been redesigned to incorporate the higher capacity booster pump. The high pressure feathering, fitting and transfer valves are incorporated in the body rather than in the base, and the high pressure relief valve system has been modified.

No maintenance or operating difficulties should be experienced by anyone familiar with the single capacity pump.

The booster pump output is delivered into the chamber surrounding the pilot valve. When the pilot valve is in the "overspeed" condition the output from the pump is delivered to the propeller and also against the relief valve. In this case, the pressure on each side of the relief valve is approximately equal, and the spring force equivalent to about 50 psi holds the relief valve closed.

If, during the overspeed condition, the piston reaches the end of its travel, the pressure will in-

crease. Then the dump valve will open and let the oil on the spring side of the relief valve bypass into the engine oil pressure line. The passage from the pilot valve to the spring side of the relief valve is small, and will cause a pressure drop of

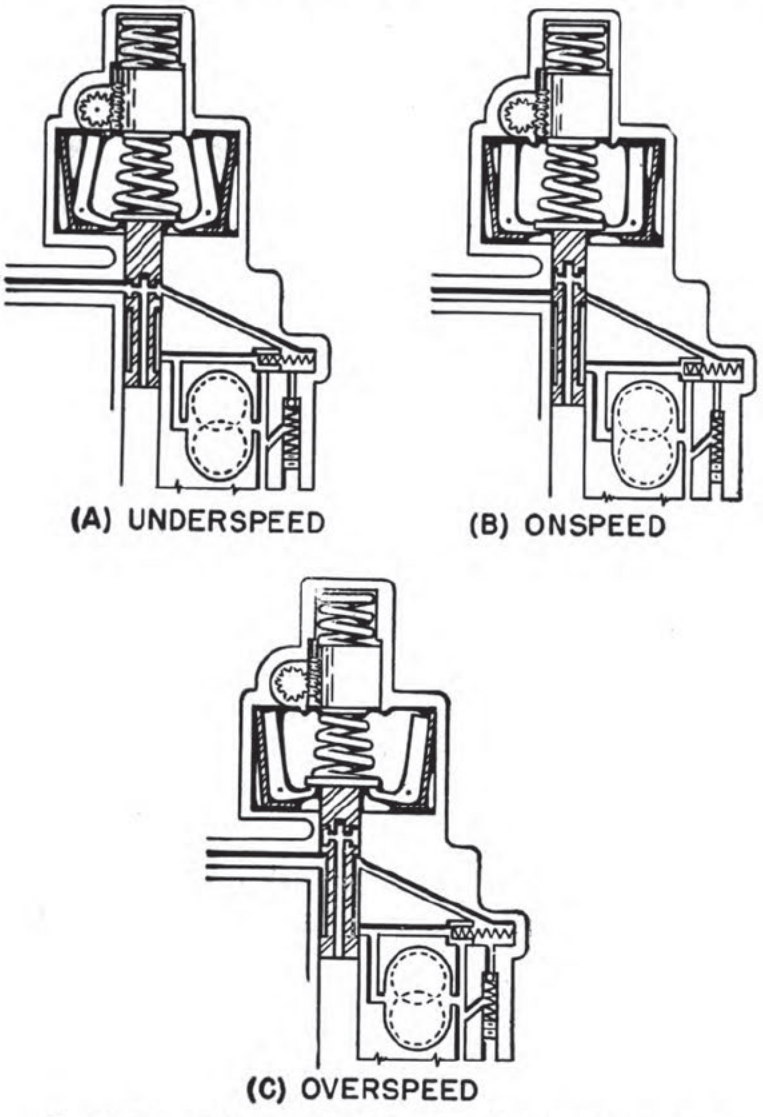

Figure 34.—Schematic double capacity governor-pump.

about 50 pounds at a flow of 2½ quarts per minute through this passage. This will cause a pressure differential across the relief valve sufficient to cause it to open and bypass the remaining booster pump output into the engine oil pressure system.

In the "onspeed," "underspeed," and "in and out feathering" positions, the pilot valve drops down and no oil is delivered to the spring side of the relief valve. Look at figure 34. Thus, with no oil pressure, the valve opens at approximately 50 pounds or at a lower power input pressure. This saves wear on the gears and shafts.

The only oil pressure adjustment on the governor is the screw adjusting the dump valve. This screw is found in the base of the governor. It is necessary to lock the adjustment with sealing wax or stick-shellac melted onto the adjusting screw.

ELECTRIC HEAD

The electric type head, shown in figure 35, used on a constant speed control accomplishes the same results as the mechanical head, namely it adjusts the compression in the governor speeder spring to regulate the rpm of the propeller. One advantage of the electric head is that governor settings are not affected by relative movement between the governor and the cockpit control brought about by structural deflections, cable slack, and flexible engine mounts.

The advantages of this electric control are essentially the same as the advantages of any remotely controlled device compared with mechanical control. It eliminates the need for mechanical connections from the cockpit to the constant speed controls. Electric wiring is comparatively simple to install and maintain. Also it represents a saving in weight over mechanical connections.

Furthermore, the brake included in the electric control eliminates any creeping to which the mechanical control may be subject. It has been found that mechanical controls must be installed very carefully to prevent creeping and at the

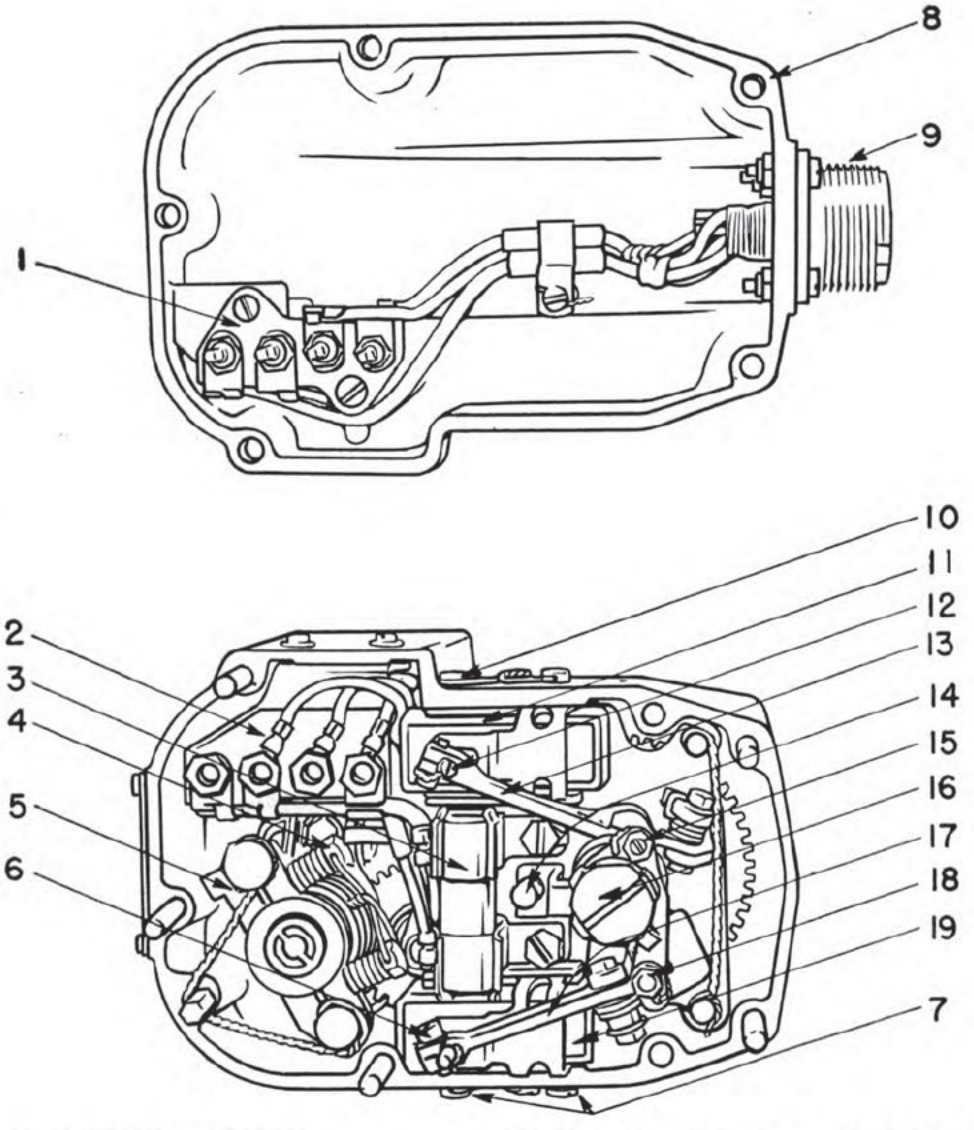

1. Jack Plate and Leads
2. Jack Plate Mating Receptacle
3. Resistor
4. Brake Band Adjusting Screws
5. Brake Band
6. Fine Adjusting Screw—Low RPM
7. External Low RPM Adjusting Screw
8. Head Cover
9. Disconnect Plug
10. External High RPM Adjusting Screws
11. Micro Limit Switch
12. Fine Adjusting Screw—High RPM
13. Micro Switch Contact Lever—High RPM
14. Guide Plate Stop Post
15. Coarse RPM Adjusting Screw—High RPM
16. Screw Shaft
17. Micro Switch Contact Lever—Low RPM
18. Coarse Adjusting Screw—Low RPM
19. Micro Limit Switch

Figure 35.—Electric head and cover.

same time to provide precise adjustment needed for synchronizing. With the electric control, it is comparatively easy to synchronize, and once synchronized, the constant speed controls are not liable to change their setting and require re-adjustment.

The electric governor head consists of a small direct current, series-wound, reversible motor which (through a reduction gear train) drives the screw shaft. Movement of the screw shaft in an up or down direction varies the compression of the governor speeder spring which in turn regulates the rpm setting of the governor.

A spring loaded solenoid clutch is incorporated in the assembly to permit accurate and positive control of the position of the screw jack.

When the solenoid is de-energized, the clutch is held open by a spring and a brake is applied to the gearing so that the screw jack cannot move. At the same time as the motor starts running, the solenoid is energized releasing the spring loaded brake and clutching the motor to the reduction gearing. When the circuit is again opened, the clutch releases, applying the brake to the gearing and allowing the motor to coast to a stop.

When the solenoid is energized, the clutch, which slides on the armature shaft, engages with the motor clutch driving member splined to the armature shaft. With the sliding clutch in this position, motor rotation is transmitted through a spur gear incorporated in the sliding clutch to an intermediate gear.

With the solenoid engaged, the rotation of the armature is transmitted through the sliding clutch to the intermediate gear, and the intermediate gear, in turn, meshes with a system of planetary reduction gears. The planetary pinions mesh with the screw shaft gear causing it to rotate.

Rotation of the screw shaft gear causes the screw shaft, which is threaded into the gear, to move up or down depending on the direction of the gear rotation. Rotation of the screw shaft is prevented by a stop guide plate which slides on a post forged in the sub-base plate.

Two levers, hinged to the sub-base plate, are actuated at the limit of screw shaft travel by the stop guide attached to the screw shaft. These levers, as shown in figure 35, operate the micro switches connected into the motor and solenoid circuit, and in this manner, limit the travel of the screw shaft. Rough adjustment of the screw shaft travel is provided by the adjusting screws located near the fulcrum of each lever. Fine adjustment is provided by the screws threaded into the end of each lever which press on the micro switch push pins.

The following procedure is recommended for disassembly of the electric head.

Remove all external safety wire from the cover, take out the five screws and the included washers, and then remove the cover.

Remove the resistor from the resistor clip.

Remove the two screws which fasten the resistor block to the sub-base.

Unless replacement is required, it is not necessary to unsolder the leads. When removing the micro switch, note the position of the insulating fibre under each switch.

On electric heads which incorporate an external micro switch cam adjustment, the two cams should be removed at this point. An electric head, Type 3A, with these cams is shown in figure 35.

Remove the screw holding the stop guide plate to the screw shaft and then detach the stop guide plate.

Take out the screws which hold the sub-base to the housing and lift off the sub-base.

Remove the spring retainer located at the bottom of the screw shaft, and then the screw shaft and the screw shaft gear.

Lift out the sun gear, but do not disassemble the sun gear and its accompanying parts. If a part must be replaced, replace the sun gear as an assembly.

Loosen the brake posts evenly to avoid jamming, and remove posts and brake assembly together.

All shims under these posts should be retained and wired to their respective posts to prevent loss. See that no shims stick to the housing.

The brake assembly may be disassembled by loosening the two screws which serve as spring retainers.

Remove the clevis pivot post. As noted above, all shims which are under the post should be kept and wired to the post. See that no shims stick to the housing.

The sliding clutch member and the intermediate gear should now be removed simultaneously, and then remove the lock ring and two ball bearings from the intermediate gear.

Do not disassemble the sliding clutch. If replacement of any of the parts of the sliding clutch is required, the sliding clutch should be replaced as an assembly.

Unscrew the two knurled knobs, shown in figure 35, on either side of the motor head and lift out the brushes. The motor bearing cap is removed by unscrewing the four screws which fasten it to the motor head.

Remove the nut from the commutator end of the armature shaft. When loosening this nut, the sliding clutch member may be slipped over the drive end of the shaft and engaged with the motor

clutch driving member in order to provide a lever on the shaft.

Remove the motor head and the brush box leads.

The spacer and shims on the end of the armature shaft should be carefully kept with the armature shaft. Next take out the brush box leads but be careful to note the way in which the leads go around the armature.

Take out the ball bearing from motor head, and then the armature shaft may be removed by tapping lightly on the drive end of the shaft. The motor clutch need not be removed from the armature shaft unless replacement of the shaft, ball bearing, or motor clutch is required.

To remove the solenoid, loosen the two screws which hold it to the housing, and unsolder the black solenoid leads at the terminal block and at the motor brush box. (On Model 3A, this lead was loosened when the jack plate was removed.) Lift out the solenoid and clevis together.

To facilitate disassembly of the clevis, solenoid and plunger, cut off the spun-over parts of the trunnion shaft which secure the plunger trunnion. Next remove the screw shaft oil seal. The mounting studs should be taken out only if replacement is necessary.

Do not remove the field coils unless replacement is required. Should replacement be required, remove the studs holding the field coils and draw out the assembly.

After disassembling the unit, wash all parts thoroughly (except completely sealed ball bearings) in carbon tetrachloride or unleaded gasoline.

Then inspect all parts for excessive wear using the clearances listed in the latest Technical Order or Service Bulletin.

The armature should be dipped in unleaded gasoline and then scrubbed with a brush. If the

ball bearing is of the completely sealed type, do not clean or lubricate it as sufficient lubrication for the life of the bearing was included by the manufacturer. Early models embodied a bearing with a seal on only one side, and these bearings should be completely washed and lubricated.

ACCUMULATOR TYPE GOVERNORS

In order to prevent the overspeeding of engines in fighter and dive bomber airplanes, it has been found necessary to provide an oil accumulator system in connection with the governor. The purpose of this installation is to provide an alternate supply of oil at sufficient pressure to change the pitch of the propeller whenever there is a loss of pressure in the governor for any reason. A schematic accumulator governor is shown in figure 36.

The operation of the governor in controlling the pitch of the propeller is similar to the Double Capacity Hydromatic Governor. In the Accumulator type, oil is allowed to flow from the pressure side of the pump to the accumulator tank. This oil compresses an air-filled neoprene rubber bag in the accumulator tank until the air pressure is equal to the governor pressure.

The oil is then held in the accumulator tank until such time as the oil pressure in the governor drops below that in the accumulator tank. When this occurs the air in the bag expands, pushing the oil into the pressure side of the governor pump. In this way a large volume of oil at governor pressure is available at all times for changing the pitch of the propeller.

To guard against the loss of oil in case the accumulator line should leak or break, an automatic shut-off valve is incorporated in the governor. If there is a serious loss of pressure

in the accumulator line, the shut-off valve will close and prevent the governor oil from being lost. But, since the accumulated pressure in the accumulator always bleeds out when the engine is stopped for any length of time, a way is provided to build up the pressure in the accumulator tank. This is done by means of bleed holes in the shut-off valve, which allows from 2 to 5 quarts of oil

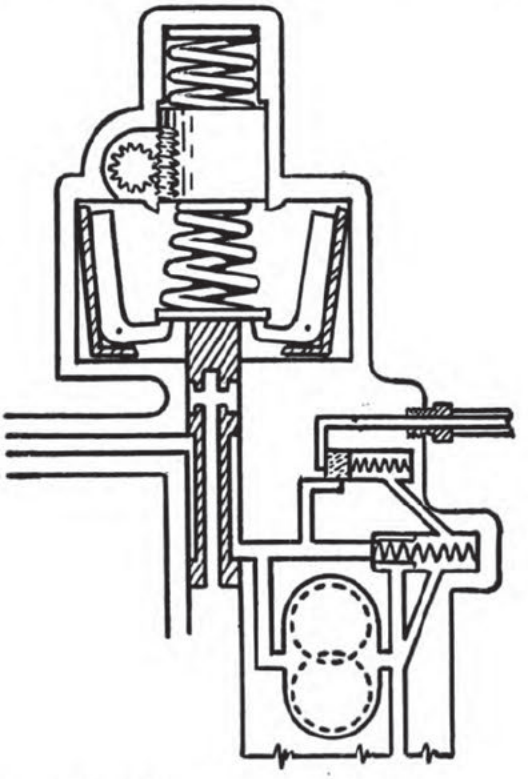

Figure 36.—Schematic accumulator governor.

per hour to flow through the valve into the accumulator tank. This small volume of oil is sufficient to increase the pressure in the line until it is enough to open the shut-off valve. As soon as the valve opens, the governor oil will flow into the tank and equalize the tank pressure with the governor pressure.

There are two types of accumulator governors, the Single Capacity Accumulator, and the Double Capacity Accumulator.

THE ACCUMULATOR

SPECIFICATIONS

	SINGLE CAPACITY	DOUBLE CAPACITY
Capacity	8 qts./Min.	16 qts./Min.
Relief Valve Pressure	350 psi. C. D. P.	600 psi. C. D. P.*
Static Pressure in Accumulator Bag	175 psi.	300 psi.*
Accumulator Shut-Off Valve Flow	2–5 qts./Hour	2–5 qts./Hour.

*The accumulator governor used on the SBD–5 and 5A airplanes is being reworked (as of October 1943) to provide a relief valve pressure of 350 psi. C. D. P., and an Accumulator bag Static Charge of 175 psi. The new governor model designation incorporating this change is 4G10–G41C.

The single capacity accumulator governor is used on the SBD–4, the double capacity on the F6F–3, and the F4U–1, and the SBD–5.

THE ACCUMULATOR TANK

The accumulator or pressure storage tank can be likened to the storage battery in electric circuits. It is a chamber for storing power to be called on as an auxiliary to hasten or aid the action of the governor, or to act as an emergency source of power in case the pump is starved for a short period.

The accumulator tank consists of a steel shell or housing, a fully enclosed synthetic rubber bag molded to a high-pressure type air valve, and oil grate, and the necessary sealing and connecting parts.

In REMOVAL of the tank, release the air pressure. And a word of caution here! The pressure should be released gradually to prevent any sudden exhaust of air resulting in possible injury or damage.

Then break the oil line connection to the accumulator.

Loosen brackets and remove the accumulator. That's all there is to it.

In DISASSEMBLY, you first remove the core of the valve with a core tool.

Remove solder plug in the spanner wrench hole of the closure cap and remove the cap. Pull the plug (strainer) and sealing gasket from the mouth of the shell.

Unscrew the two nuts from the valve stem and push the valve stem into the tank after attaching a wire to the stem.

Push the other end of the wire through the tank and out the mouth of the shell, being careful not to puncture the bag. Pull the wire completely out of the tank until the valve stem appears in the mouth of the tank.

Grease the mouth of the tank thoroughly and then slowly pull the bag from the tank. Do not use the wire for this operation, but grasp the rubber in the hands and gently pull it out.

For INSPECTION of the tank, a 30-pound load should be applied to pull the stem from the bladder. This load must have no effect on the bond.

Inflate the bag to 200 percent its normal size and inspect the surface carefully for weak spots, flaws, or breaks. The bag should then be completely immersed in water to detect leakage. The bag should remain inflated for 24 hours without loss in size or any permanent stretch.

The inside of the shell should be cleaned thoroughly and air blasted. Examine the inside surface for sharp edges, pits, and protrusions.

When inspecting the plug, see that there are no sharp corners on the grate-plate holes.

The sealing gasket must be clean and free from cuts and abrasions.

In ASSEMBLY, remove the valve core. Thoroughly wet the inside of the bladder with hydraulic fluid by inserting a small quantity of the fluid into the bag and washing it around the whole interior. The excess oil is then ejected.

Attach a wire to the valve stem and thread the opposite end of the wire through the accumulator tank and out the air end. Thoroughly grease the mouth of the shell, wrap the bladder longitudinally to expell the air, and pull the wire gently until the bladder is in the tank. Remove the wire and replace the washer. Replace the two nuts, locking the second down on the first. Replace the valve core.

Replace the synthetic rubber sealing gasket against the shoulder of the plug. Then insert the plug in the mouth of the housing and draw the nut down tightly on the assembly with a spanner wrench.

For BENCH TEST of the assembly, inflate the bladder to its operating pressure.

Check for leakage by immersing in water. If air bubbles come out of the oil end, it indicates a leaky bladder, or if they come out the air end, a new valve core is required.

If time is available, it is recommended that the accumulator be allowed to stand for one hour and that the pressure again be checked. No pressure drop whatsoever should be detected.

For INSTALLATION, place the accumulator (with the air pressure in it) loosely in its supporting brackets.

Disconnect the accumulator to governor oil line at the governor end and prime the line with engine oil to insure that no air bubbles are trapped in the line.

Connect the line at both ends in such a manner as to prevent air from getting into the system.

Care should be taken to avoid twisting or distorting the lines and fittings.

Tighten accumulator support brackets. Check safety wiring, bonding, and oil line supporting clips for security and tightness.

Warm up engine thoroughly.

A DAILY INSPECTION should be made of all joints and connections in the oil line for signs of leakage. Also check the air pressure in the bladder.

Low pressure installations should have an initial charge of 175 psi air pressure in the bladder. Minimum pressure for good operation is 150 psi.

High pressure installations should have an initial charge of 300 psi air pressure in the bladder. Minimum pressure for good operation is 250 psi.

AUXILIARY PRESSURE SYSTEMS

Where does that extra-high-pressure oil used for feathering and unfeathering come from? There are several types of auxiliary pressure systems that can be used for the purpose.

The usual system has an INDIVIDUAL electric-motor-driven pump for each engine of the airplane. Each pump supplies the high-pressure oil for the propeller attached to that engine.

Another type has a CENTRAL electric-motor-pump which sends the oil, through a selector valve, to any individual propeller the pilot wants to feather.

A third method uses the REGULAR HIGH PRESSURE OIL SYSTEM of the airplane powerplant, and sends a special low viscosity oil through individual valves, to the different propellers. You'll find out all you need to know about each of these systems by consulting the service literature for the particular system on which you may be working.

Regardless of which of these three oil-booster systems furnishes the governor oil pressure, the story of what happens after the oil starts on its journey to the propeller is the same.

You're already familiar with the operation of the control unit. The blade and cam arrangement (which takes the place of the blade counterweight system on the constant-speed propeller) is quite different. In the counterweight type propeller,

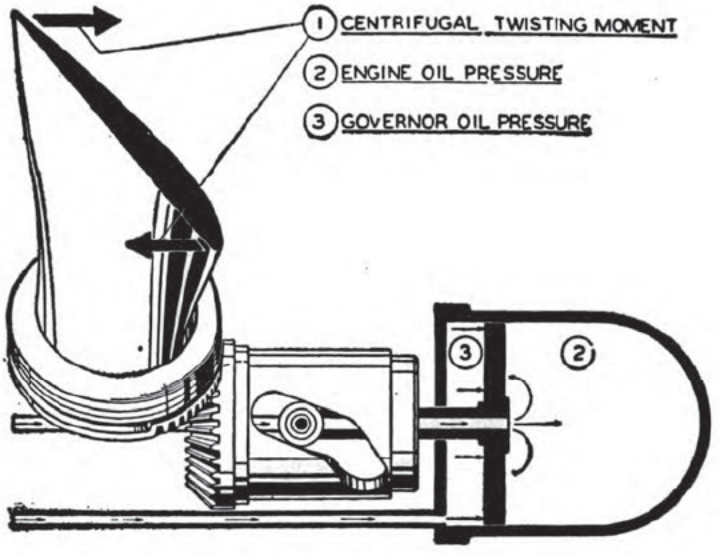

Figure 37.—Propeller control forces.

you recall, the cylinder moved back and forth on the piston to change the blade pitch. In the hydromatic propeller, the cylinder is stationary and the piston does the moving. As it moves inside the cylinder, it pulls or pushes a cam roller which turns the inside cam. The outer cam remains stationary. As the cam turns, the beveled gears at the end of the cam operate in mesh with the gears at the base of the blade to change the pitch.

You can see from figure 37 that if oil from the ENGINE pressure lines enters the cylinder, it will

force the piston BACKWARD (inboard) and move the cam in one direction. If the GOVERNOR pressure oil enters the cylinder, the piston will move FORWARD (outboard).

Between these two pressures, the piston keeps the propeller balanced and the constant-speed system in an ONSPEED condition. The entire propeller-governor system is so sensitive that a deviation of even 2 or 3 rpm from the speed for which the governor is set is sufficient to send the control into action.

The engine oil pressure is used only to assist the blade twisting moment in moving the blades toward low pitch. The entire control of the propeller during constant-speed operation is accomplished by means of a single oil passage between the governor base and the propeller. Variations in pressure and volume of the oil flowing in this passage will control the propeller.

So far, all this has nothing to do with feathering. It's simply the application to the hydromatic propeller of the constant-speed principle you already know about. What happens when the pilot decides to feather his propeller is something else again.

In figures 38, 39, 40, 41, and 42 you'll notice the changing positions of the distributor valve in the dome assembly. When only the constant-speed mechanism is operating, this valve just acts as a passage for the flow of oil to and from the propeller cylinder.

Also, when the feathering control button is operated by the pilot, this valve continues to carry the high pressure to the inboard side of the piston. First, the auxiliary pressure oil system is instantly brought into circulation. It comes into the system through the external high-pressure oil line.

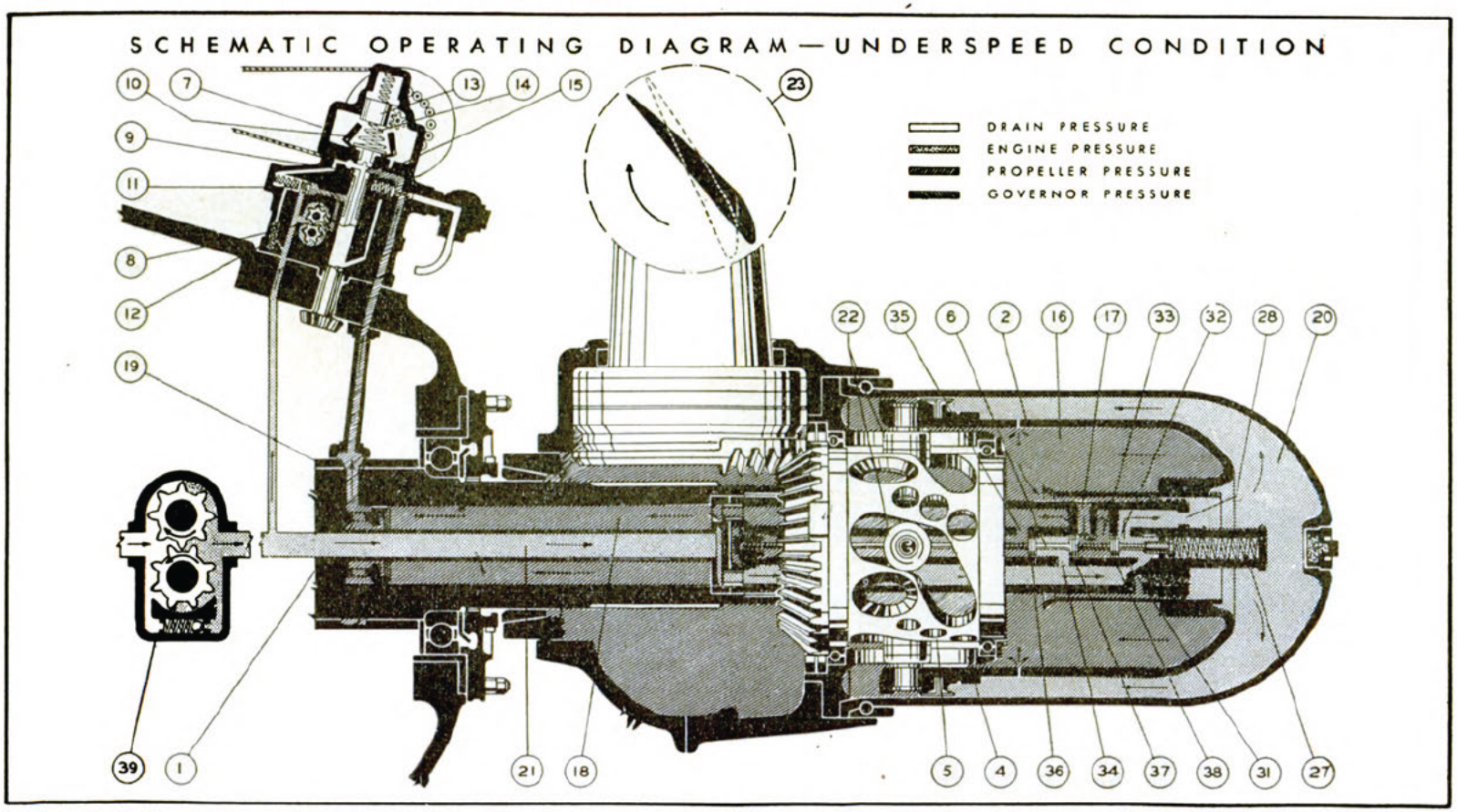

Figure 38.—Underspeed.

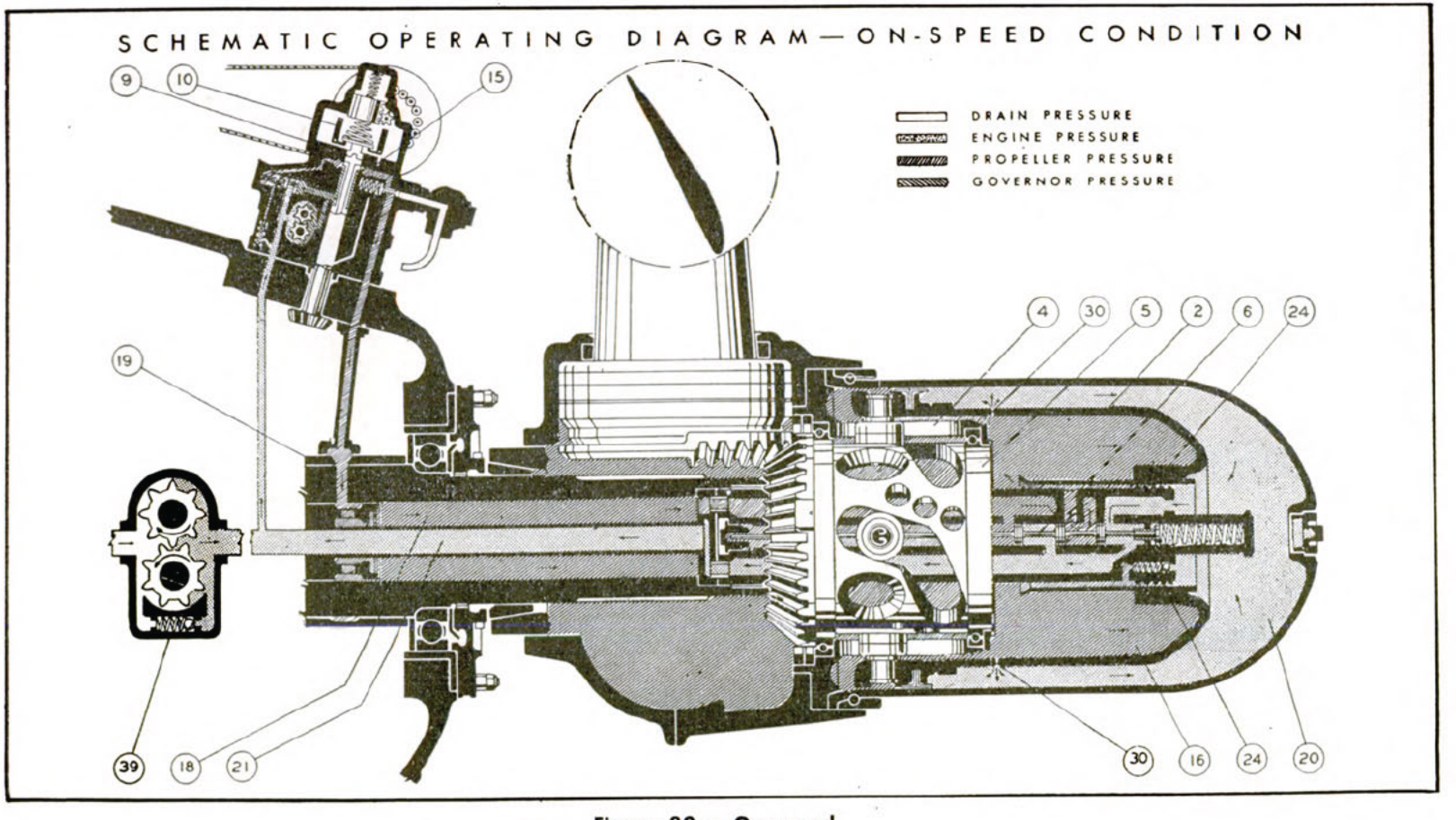

Figure 39.—On-speed.

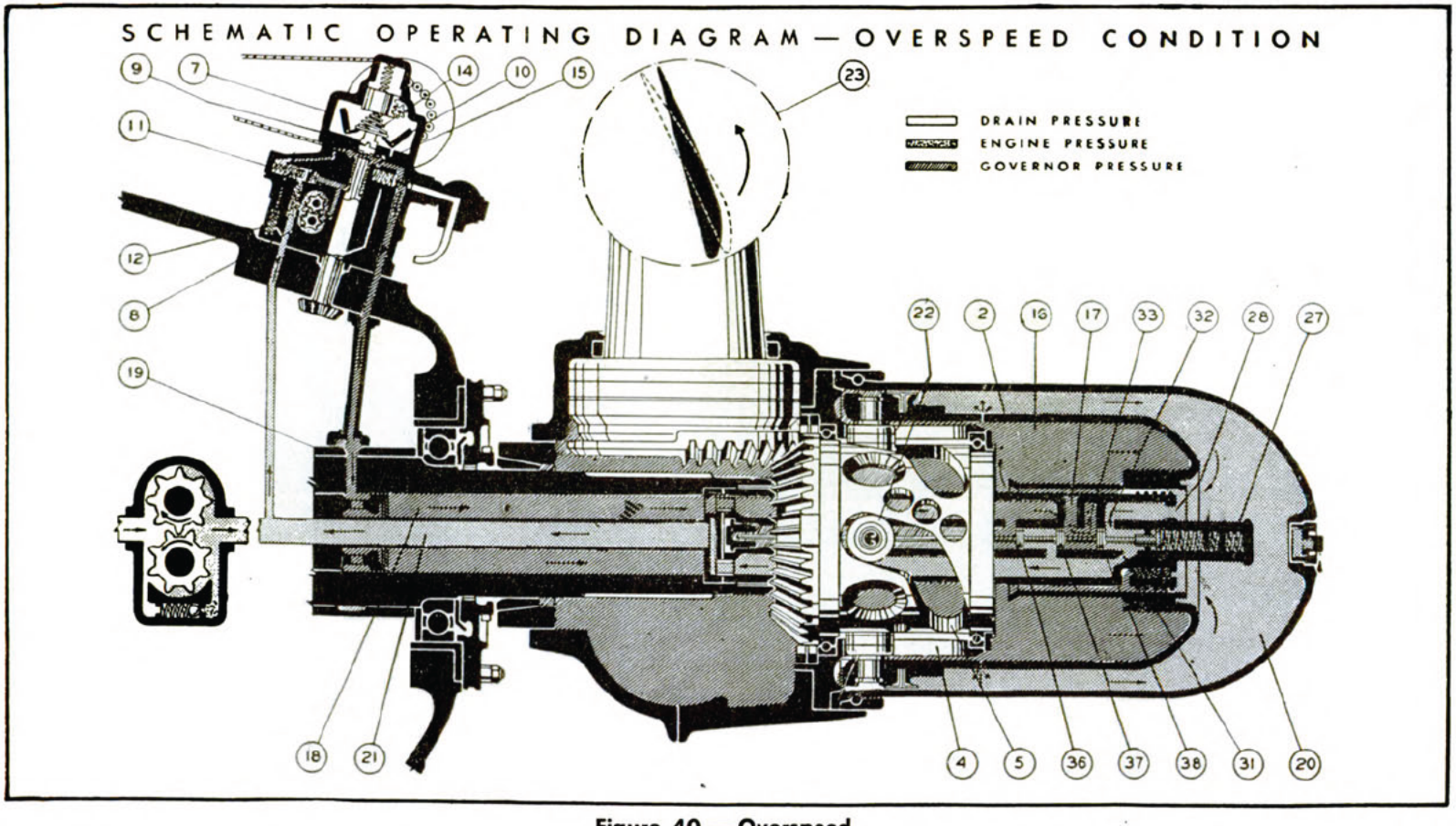

Figure 40.—Overspeed.

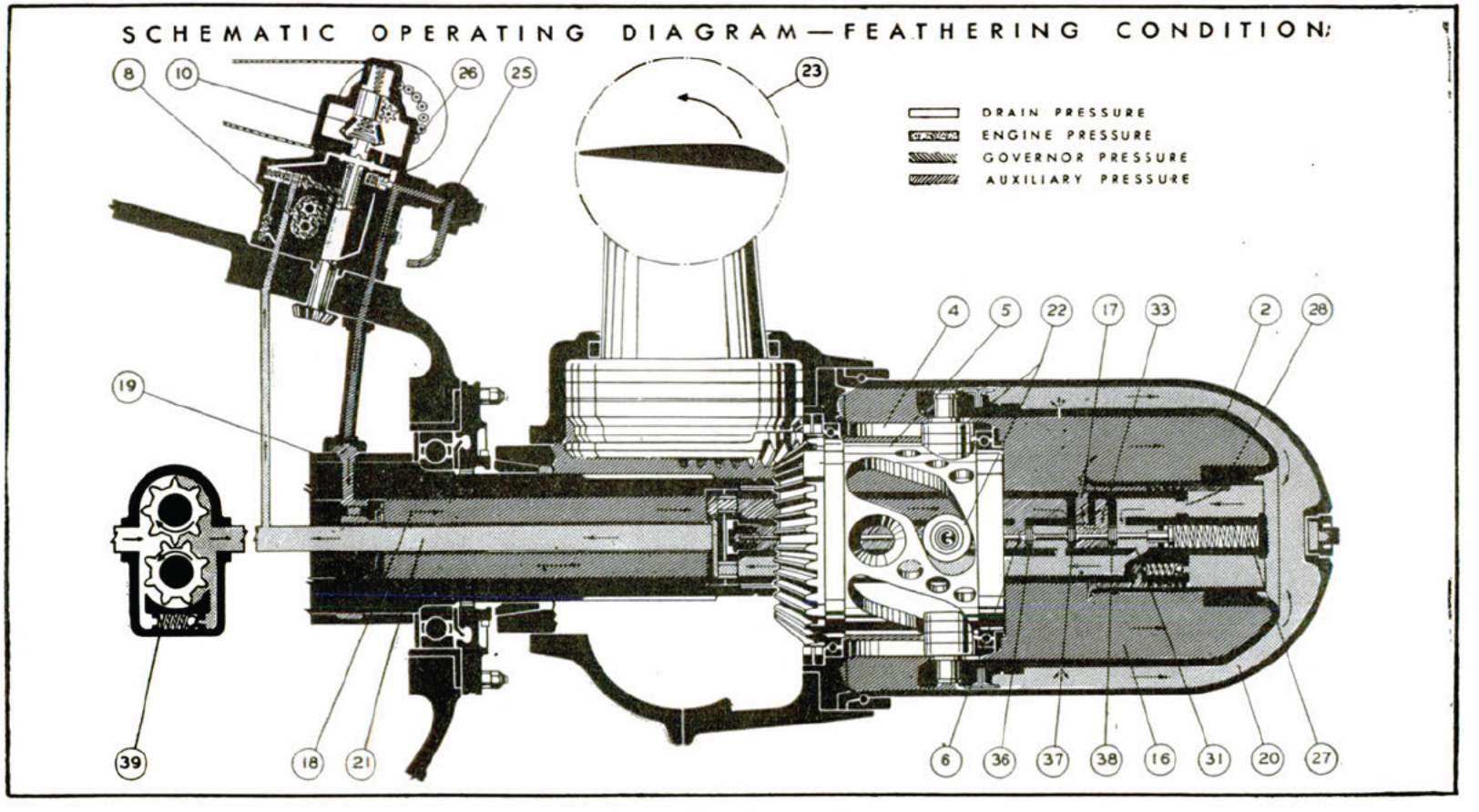

Figure 41.—Feathering.

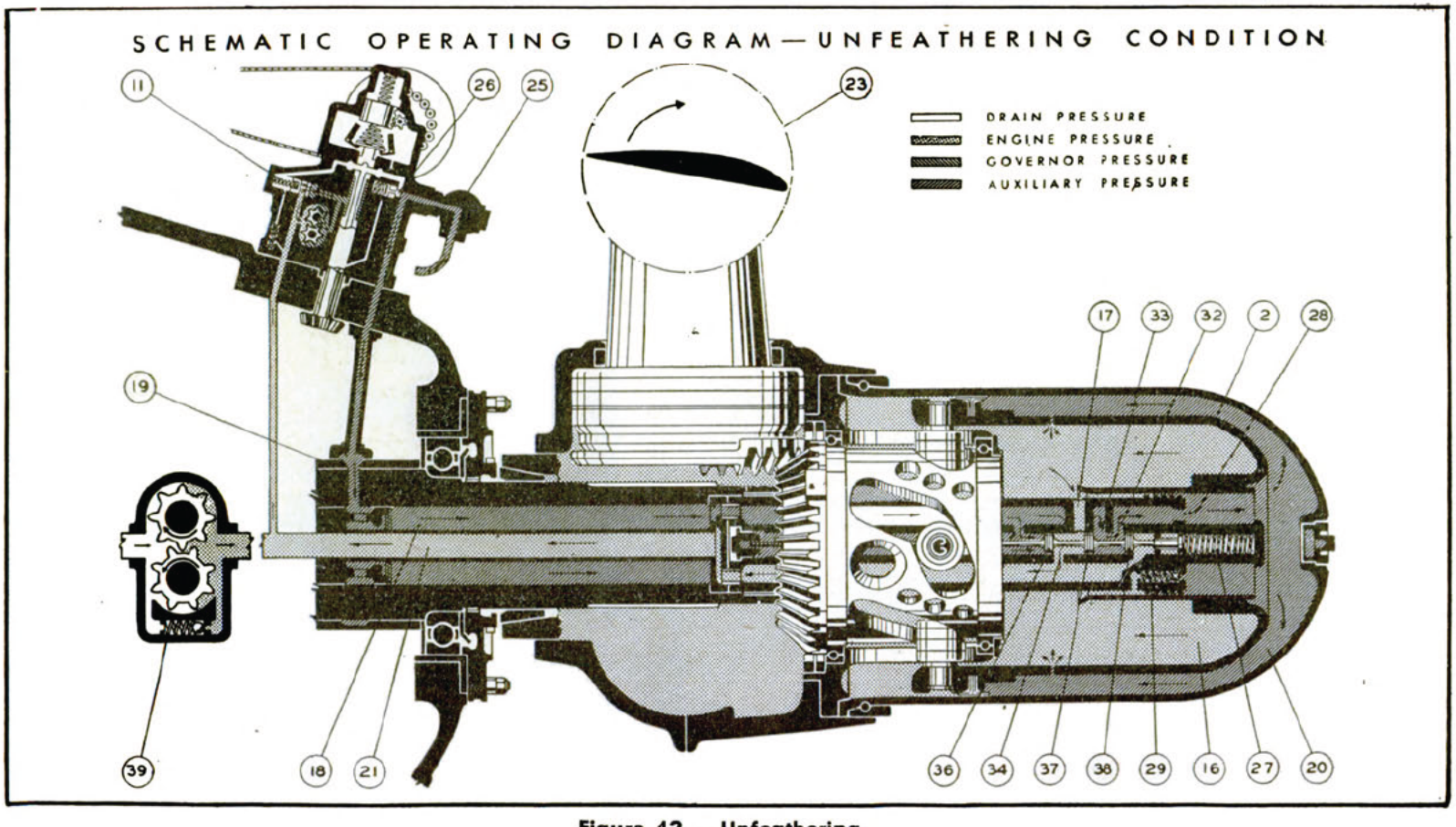

Figure 42.—Unfeathering.

KEY—FIGURES 38 TO 42

1. Air Separator Plug
2. Double Acting Piston
4. Fixed Cam
5. Rotating Cam
6. Distributor Valve
7. Constant Speed Control Unit for Governor
8. Governor Booster Gear Pump
9. Governor Pilot Valve
10. Governor Fly-Weights
11. Governor Relief Valve
12. Governor Dump Valve
13. Governor Rack
14. Governor Speeder Spring
15. Propeller-Governor Metering Port
16. Inboard Piston End
17. Distributor Valve Inboard Outlet and Inlet
18. Propeller Shaft Governor Oil Passage
19. Propeller Shaft Oil Transfer Rings
20. Outboard Piston End
21. Propeller Shaft Engine Oil Passage
22. Cam Rollers
23. Blade Angle Schematic Diagram
24. Distributor Valve Oil Seal Ring
25. Governor High Pressure Transfer Valve Elbow
26. Governor High Pressure Transfer Valve
27. Distributor Valve Spring
28. Distributor Valve Outboard Outlet and Inlet.
29. Dome Relief Valve
30. Piston Bleed Hole
31. Distributor Valve Port
32. Distributor Valve Port
33. Distributor Valve Port
34. Distributor Valve Port
35. Distributor Valve Port
36. Distributor Valve Land
37. Distributor Valve Land
38. Distributor Valve Land
39. Engine Oil Pump

The oil in the distributor valve is then under a much higher pressure than it was for constant-speed operation.

During the constant-speed period, the only portion of the cam slot that's used is that part from the inboard end to where the slot takes a sudden drop. This portion of the slot—roughly, the inboard half—provides a blade angle range of 35°. Normally, this amounts to from 10° to 45° at the 42-inch radius.

When the higher oil pressure is admitted into the distributor valve, the pressure on the inboard section of the piston moves the piston outward into the cylinder. This moves the cam roller down into the outboard portion of the cam slot and rotates the cam accordingly. As the cam turns, it shifts the propeller blade to the feathering angle.

The displaced portion of the oil that was in the outboard end of the cylinder runs back into the engine oil system through the same passages as during constant-speed operation.

Having reached the full-feathered position, further movement of the mechanism is prevented by the positive high-pitch stops on the rotating cam. The propeller blades are now full-feathered, and remain there through balanced forces on the blades, until the pilot wishes to unfeather them.

UNFEATHERING

Unfeathering the propeller causes the distributor valve to reverse the flow of oil.

When the pilot closes the control switch for unfeathering, the auxiliary oil pressure is brought to bear on the outboard end of the piston. As the outboard portion of the cylinder fills with oil, the piston moves back (inboard) and the cam roller and cam and blade gears act exactly in reverse

of feathering. When the propeller is unfeathered to the desired pitch, the pilot permits the control switch to open, and the system stabilizes itself. The oil that is displaced from the inboard section of the cylinder as the piston is pushed inward runs back into the engine supply, and the constant-speed control again takes charge.

Now to go into a little more detail as to the whys and wherefores of this process. Assume that your airplane is equipped with an individual electric motor-driven pump for supplying the auxiliary oil

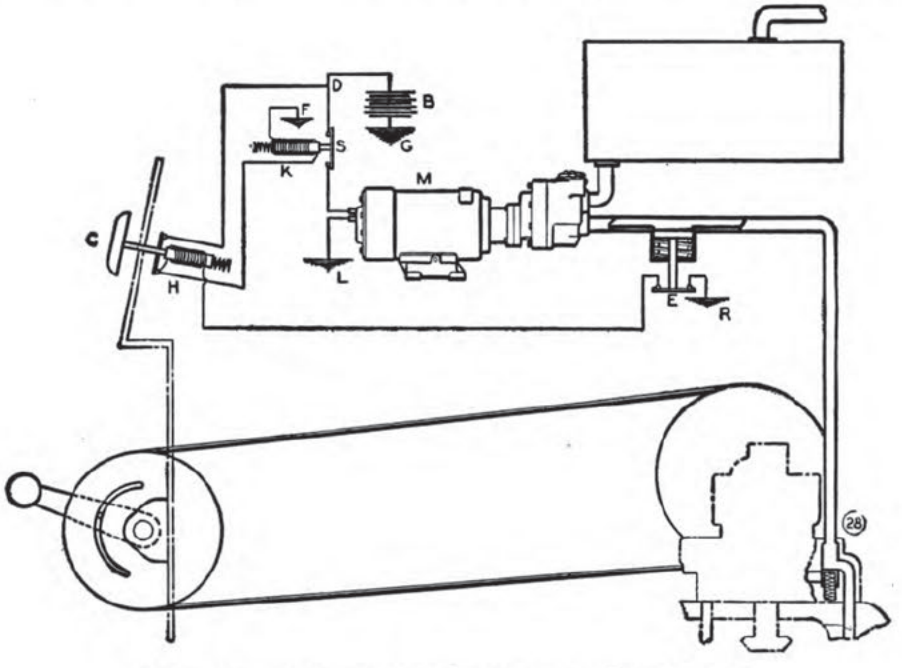

Figure 43.—Diagram of electric motor-driven pump.

pressure supply. The diagram in figure 43 shows the parts of such a system. The pilot depresses the propeller control switch *C*. This closes the electric circuit from ground *G* through battery *B*, switch *C*, and solenoid switch *S* to ground *F*. The circuit *G–B–D–D–M–L* is now closed and the motor *M* starts the pump. At the same time, holding coil *H* is energized through the circuit *G–B–D–H–E–R*. This keeps switch *C* closed without further attention from the pilot.

The pump, as soon as it starts operating, sends a supply of oil to the governor transfer valve through the external line *28*. At a pressure of approximately 150 psi, the valve disconnects the governor from the system by closing the governor port. Simultaneously, the valve connects the pump with the inboard end of the propeller cylinder by means of the identical passages which formerly were used to conduct governor oil to the propeller for constant-speed operation. The piston moves toward the outboard end of the cylinder and the blades are feathered at a speed proportional to the rate at which oil is supplied to the cylinder.

The pressure in the system during the feathering stroke differs according to the mechanical friction and the blade twisting moment. When the blades reach the full-feathered position, the pressure in the inboard cylinder end, and in the passages connecting it with the pump, now increases rapidly. When the pressure reaches the opening pressure of the pressure cutout switch *E*, it opens. This de-energizes the holding coil *H* and allows the control switch *C* to return to the OFF position. This, in turn, de-energizes the coil *K*, breaking the motor circuit and stopping the pump. The pressure in both ends of the cylinder is equalized, and the propeller remains in the feathered position because of the balanced forces on the blades.

When the pilot desires to unfeather the propeller, he holds the control switch *C* in the ON position. This starts the pump and increases the pressure until the distributor pilot valve moves.

With the inboard end of the cylinder connected with the engine lubricating system, and the high pressure on the outboard end of the piston, the latter moves inward, unfeathering the blades and forcing the oil on its inboard end into the engine

system. As the blades are unfeathered, they begin to windmill.

When the engine has reached a reasonable rpm (depending on the blade design, engine-propeller gear ratio, and air speed) the control switch *C* is released. This discontinues the high-pressure oil from the pump and allows the propeller distributor pilot valve and the governor cut-off valve to return to their normal positions. The governor is again connected with the inboard end of the cylinder and constant-speed operation is automatically resumed at the rpm for which the governor is set.

The dome pressure relief valve prevents excessive pressures in the outboard cylinder end, should the propeller be unfeathered, until the mechanism reaches the positive low-pitch stops. In this case the pressure tends to reach the maximum value capable of being supplied by the pump. The dome relief valve is set to limit this pressure to 300 psi, which is adequate to unfeather the propeller under any set of conditions.

This valve, like the distributor valve and the governor relief valve, is balanced so that a maximum pressure difference of 300 psi is available in the outboard cylinder end for unfeathering, regardless of the lack of pressure which may be encountered by the piston in displacing the oil on its inboard side into the engine lubricating system. This is accomplished by allowing the back pressure to assist the relief-valve spring.

This relief valve normally would not be called on to function in flight because, in unfeathering the propeller, excessive wind-milling speeds normally would exist before the blades reached the low-pitch stops and the pilot would have to shut off the auxiliary pump.

The distributor valve remains connected with the outboard cylinder to act also on the outboard end of the distributor valve, aiding the spring, and increasing by an equal amount the pressure required at the inboard end of the valve to close the port. In that way, a maximum pressure difference equal to the distributor valve spring tension will be available for moving the piston in the feathering direction, regardless of the back pressure it may encounter in forcing the oil from the outboard end of the cylinder into the engine lubrication system.

You close the propeller feathering switch and hold it closed until the propeller is rotating at the desired rpm. In this case the pump motor circuit is completed in exactly the same manner as during the feathering operations.

As this pressure increases to over 400 psi, the pressure cut-out switch opens and de-energizes holding coil *H*. This, however, does not break the pump circuit, because the pilot still is holding the control switch *C* closed. Also, as the pressure in the distributor valve passages increases, the distributor valve moves outward against the spring under the action of the pressure on its inboard end. When this pressure increases through 400 psi, the land on the distributor valve passes the port, shutting off the connection between the pump and the inboard cylinder end.

At the same time, this end of the cylinder is connected with the engine oil system by spring tension of distributor valve spring. Then another port admits the high-pressure oil from the pump to the outboard end of the cylinder.

Another important feature of hydromatic propellers, on installations using the individual pump system, is the DIFFERENTIAL PRESSURE CUTOUT SWITCH. Have a look at figure 44.

The cutout switch is designed to mount on the governor and, at a specified differential in oil pressure, to break the flow of electrical current to the cutout switch. This in turn de-energizes the solenoid holding coil in the cockpit and stops the high pressure pump when the blades reach the feathered position.

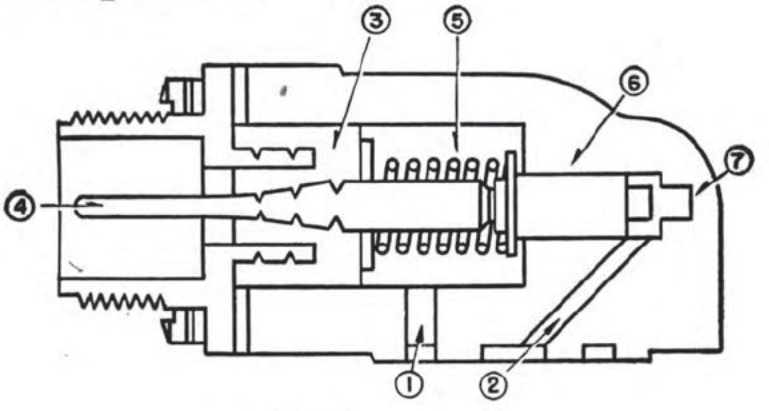

1. ENGINE OIL PORT
2. AUXILIARY OIL PORT
3. INSULATION
4. CONTACT FIN
5. SPRING
6. PISTON ASSEMBLY
7. ELECTRICAL CONTACT TO BODY

Figure 44.—Differential cutout switch.

When the oil pressure in the propeller builds up to the cutout valve after the feathered position has been reached, this switch stops the electrically-driven, independent pump motor supplying the auxiliary pressure. The switch itself is of the single-wire, pressure-operated, single-pole, single-throw type. Normally, it is in the closed position. When connected into the propeller control system, this switch opens the feathering-button holding-coil circuit when the auxiliary oil pressure reaches the cutout valve. This pressure is supplied by the feathering pump.

Auxiliary oil pressure is applied to the center port, and is greater than the engine oil pressure that is applied to the ring port. When this differ-

ence in pressure overcomes the spring tension, the switch opens. As soon as the pressure difference drops below the spring tension, the switch closes, and stays closed until the auxiliary oil pressure builds up again.

What goes on inside the switch? The auxiliary high-pressure oil supplied to the center port, moves the plunger assembly away from the fixed contact point, working against and overcoming the normal engine oil pressure that comes through the ring port, and against the force of the switch spring. The movement of the plunger breaks the cutout switch circuit. This de-energizes the feathering-button holding coil, releases the button, and shuts off the auxiliary oil pump.

Wondering about keeping the cutout switch in the pink of condition? Well, between overhaul periods the feathering test will usually suffice.

If a failure occurs in an engine, especially a bearing failure, the cutout switch should be disassembled, and blown clean with air. This will prevent small chips from clogging up the moving parts or grounding the insulated parts.

Better check the gaskets for oil leaks, and if necessary, tighten the screws or replace the gaskets.

If the spring doesn't measure up to specifications, replace it.

You can add shims if the switch opens at any pressure before the blades are full feathered.

REMOVAL

You've already learned the general principles of removing a propeller from the crankshaft. As far as the hydromatic quick-feathering propeller is concerned, there are few variations. Here's the procedure—

For installations on engines which breathe through the propeller shaft, remove the lock ring and breather cup from the front of the dome. Remove the lock screw from the dome retaining nut and unscrew the nut. Then remove the dome assembly and take the lock ring off the propeller retaining nut. Unscrew the valve assembly. Next, unscrew the propeller retaining nut and remove the propeller from the shaft.

The hub snap ring and related parts inside the spider are arranged so that, as the retaining nut is backed off it pulls the propeller with it until the nut reaches the end of the propeller shaft thread.

To remove the governor unit itself—

First disconnect the cockpit control from the unit. Then, disconnect the high pressure pipe from the base of the control unit. Remove the four mounting stud nuts, and take off the governor.

If it is temporarily necessary to remove a unit between propeller overhaul periods, the cockpit control should be moved to the minimum rpm position. The pulley (or lever) and shaft should be marked in relation to the cover before removal from the control shaft. This will permit reinstallation in exactly the same position and make readjustment of the control system easier.

DISASSEMBLY OF HUB

Place the entire assembly on the bench spindle. Remove all barrel bolts. Split the barrel halves about .01 inch at the parting line by driving aluminum wedges in the tapered reliefs at each blade bore. A special tool is made to pull the barrel halves apart. Now take off the front and rear barrel halves by wedging them apart as above,

and, if necessary, driving them off with a non-metallic mallet.

Here's a CAUTION. Be careful not to mar or scratch the parting surfaces of the barrel. Sharp edges adjacent to blade oil seals should be carefully preserved.

Remove the snap ring, retaining nut, front cone, oil seal and oil seal washer from the spider. Next unmount the blades, barrel supports, and the phenolic spider ring. Finally, remove the shim plates, shims, gear segments, and spring packs from the blades.

DOME ASSEMBLY

Remove the barrel seal from the base of the fixed cam.

Take out the high pitch stop ring and then the low pitch stop ring by inserting AN–10–24 screws in the tapped holes which are incorporated in the lug portion of each ring. Note the high and low pitch settings in order to facilitate reassembly.

Unscrew the dome shell retaining screws which are inserted through the base of the fixed cam.

Insert the dome lifting handle in the dome breather hole. To facilitate removal of the dome shell, a wooden bar 2″ x 2″ can be inserted through the piston sleeve and tapped against the dome breather hole flange inside the outboard end of the dome shell.

To remove the dome retaining nut, pull the dome retaining nut welch plug and then rotate the dome shell until all of the dome retaining nut balls are out.

Remove the piston gasket nut lock cotter and screw, and then using the combination wrench, take off the piston gasket nut. Lift the piston gasket off the piston assembly.

Compress and take out the cam roller shaft lock wires, and pull out the cam roller shafts.

Lift the piston assembly off the cams, and then remove the cam rollers and the included bushings.

Take out the cam bearing nut cotter, and then unscrew the nut using the combination wrench. Tap the rotating cam out of the fixed cam, and then take off the inboard and outboard cam bearings.

DISTRIBUTOR VALVE DISASSEMBLY

If a breather tube is attached to the valve housing, remove the cotter pin and then unscrew the breather tube.

Take out the safety wire at the base of the valve spring housing and then unscrew this housing.

Lift out the distributor valve spring, washer, gaskets, and the valve itself.

Unscrew and take out the dome relief valve ball and pipe plug assembly, and then take out the dome relief sleeve, spring, and gaskets.

Tap the valve housing oil transfer plate and the included gasket off the base of the valve housing. This is best accomplished by inserting a rod against the oil transfer plate through the valve housing breather passages to be used in tapping evenly against the plate.

Straighten out the tabs on the dash pot locking gasket and then unscrew and remove the dash pot.

Remove the oil seal rings, and take off the oil seal ring expanders. To remove the rings, use the reverse of the installation procedure.

GOVERNOR DISASSEMBLY

When you're disassembling the governor unit, first remove the four nuts and planuts which hold the cover and body sections together. Then lift off the cover section. Carbon formed in the drive-

gear shaft, above the operating range of the pilot valve, may cause the pilot valve to stick. A little solvent will free the pilot valve so you can remove it. Remove the high rpm stop pin from the pulley. Remove the rack from the cover section by turning the control shaft in a counterclockwise direction. Remove the pilot valve from the drive-gear shaft. Take off the snap ring which holds the flyball assembly on the drive-gear shaft, and lift off the flyball assembly.

On units having bases for mounting on the standard nose pad, two dowel pins and a tapered pin are used to locate the base accurately on the body.

Remove the base from the body. This is most easily done by tapping on the upper end of the drive-gear shaft. Lift the drive-gear shaft and idler gear from the body section. Unscrew the relief valve plug and remove the spring and plunger. It is seldom necessary to disassemble the pilot valve from the spring collar. This should be done only when the pilot valve ball bearing is to be replaced.

That part disassembled, you next remove the control shaft assembly from the cover section. Here's how—

Remove the cotter key and unscrew the control shaft packer washing nut. Pull out the control shaft, packing washer and spring. Now remove the bolt through the high-pressure elbow in the base. Remove the ball-check spring and plunger, and you're finished.

INSPECTION AND REPAIR

Hydromatic propellers require the same sort of going over as other propellers. The governor control is the "brains" of this propeller, and it rates priority on your inspection list.

First inspect all connections, fastenings, the governor hook-up, lever tension and attachments. Then check the operational movement, freedom of movement, side play, end play, and safetying. Make an OPERATIONAL CHECK of the action of controls, movement of the parts, and accuracy of the movements. Tighten any loose connections, take up excess play and make all the adjustments you find necessary.

A DAILY OPERATIONAL WARM UP CHECK OF THE GOVERNOR WILL ALSO GIVE A CHECK OF THE CONTROL OPERATION!

Here are a few things to remember regarding the maintenance of the pulley cable system.

INSPECT!—

Cable (for rust, fraying, pulled ends in spice, tension, frayed strands).

Sheaves (for side play, bearing wear lubrication, grooving).

Leads and Guides (for chipping, wear, seating, and looseness).

Pulley, Quadrant, and Friction Control (for tightness, play, and grooves).

Don't forget, the cable may need oiling! Inspect all safetying and renew it if necessary. The following steps are helpful in making adjustments, testing, and inspecting the governor under operating conditions.

Check internal leakage, external leakage, oil flow, and relief valve settings. Adjust minimum rpm, adjust pressure cut-out switch, and check full-feathering operation. Record all readings on an inspection sheet.

HUB ASSEMBLY

Be sure all parts are free from grit and lubricated with a thin coating of engine oil (unless otherwise noted in the following instructions).

The first step in BARREL AND SPIDER ALINEMENT is the installation of a splined sleeve in the spider. Then insert the flange of the propeller retaining nut in the corresponding grooves of the split front cone, and install this assembly in the spider. Run the nut down snugly on the sleeve, using a tabular wrench. Install the split phenolic spider ring in the recess near the bottom of the spider, in such a manner that the three flats on the ring register with the shim-plate bearing surfaces on the spider.

Coat three 0.005″ barrel support shims with grease and place them on the spider between the arms. Install the three barrel supports over these shims with the flat ends toward the front of the spider. Place the spider assembly in the rear half of the barrel and install the front half of the barrel over it. The barrel and spider should be assembled so that the numbers 1, 2, and 3 on the parting surface of each barrel half at the blade sockets correspond with the same numbers on the spider arms.

The spider-barrel assembly is illustrated in figure 45.

Fasten the barrel halves together with barrel bolts. Center bolts on each side of the barrel when drawn up tightly.

With an indicator, check the concentricity of an arbor through the splined sleeve with the inside surface of the front barrel half just forward of the dome shelf. The eccentricity must not exceed the allowable limits. Adjustment is obtained by varying the barrel support shim thicknesses For the final assembly, one solid shim, of thickness not less than 0.005″, must be used under each support block. These shims may be obtained in thicknesses from 0.005″ to 0.015″.

Number the blocks and shims 1, 2, and 3 in counterclockwise rotation, starting with No. 1 between spider arms No. 1 and No. 2 and stamp the same numbers on the top chamfer of the spider. Remove the arbor and install the assembly on the assembly post. Then remove the front

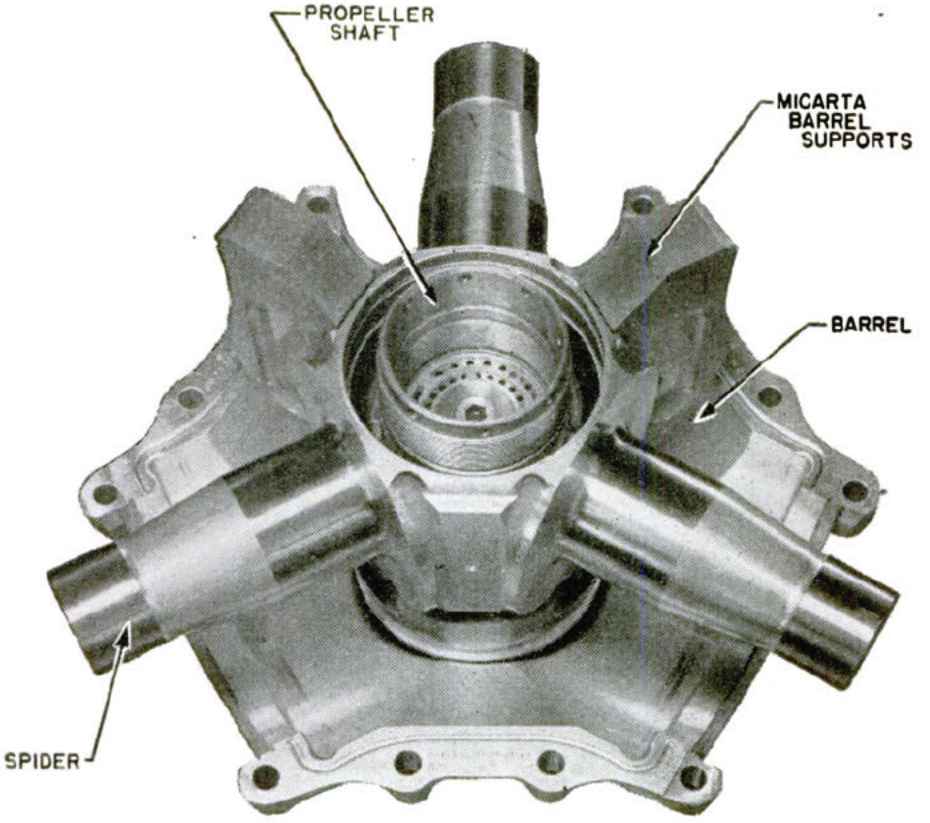

Figure 45.—Spider-barrel assembly.

half of the barrel and ease down the rear half. The base of the spindle should be PADDED to prevent contact of steel against steel.

BLADE AND GEAR SEGMENT ASSEMBLY

Check the blade bushings to be sure they are properly installed in the blades. Although the blade bushing appears symmetrical about its central axis, actually two of the spring pack slots are offset in order to preload the gear teeth. For this reason, there is only one angular position in which

the bushing may be installed for a given type propeller The same blade bushing may be used for any of the following combinations but it is absolutely essential that its position be as follows:

For a right-hand screw, tractor propeller, on a right-hand engine, the bushing must be installed so that the locating arrow on the face of the bushing flange is alined with the words "Tractor Blade" stamped on the blade butt.

For a right-hand screw, pusher propeller, on a left-hand engine, the same blade may be used but the arrow on the bushing must be alined with the words "Pusher Blade" on the blade butt.

For a left-hand screw, tractor propeller, on a left-hand engine, a different blade is required. The bushing must be installed so that the arrow is alined with the words "Tractor Blade" on the blade butt.

For a left-hand screw, pusher propeller, on a right-hand engine, the same blade may be used as for a left-hand screw, tractor propeller, on a left-hand engine, but the bushing must be installed so that the arrow is in alinement with the words "Pusher Blade" on the blade butt. For left-hand screw propellers, left-hand stationary and rotating cams are required.

Install the shim-plate drive pins in the holes in the blade-bushing drive pins—two in each blade. These should be a light drive fit. Drive the thrust-plate pin into the thrust plate. Place the thrust plate on the flat of the blade-bushing flange, and tap it into place so that the pin is flush with or slightly below the curved surface of the thrust plate. The thrust plate is not symmetrical and hence, if it is not properly installed, one end will overhang one of the bushing spring pack slots. Although there are two flats on each blade bushing, only one thrust plate per blade is required.

It should be placed toward the flat side of the blade on tractor propellers and toward the cambered side of the blade on pusher propellers.

Wash all spring leaves with gasoline to remove any grit, and lubricate them with engine oil. Assemble approximately 34 spring leaves in each pair of spring retainers. Because of manufacturing tolerances, the number of leaves required to give the proper fit in the spring retainers will vary slightly. In any case, use only a sufficient number of leaves to give a snug sliding fit of the retainer over the spring leaves. Never attempt to force too many leaves into the retainer.

Install the spring packs in the blade gear segments. Attach the gear segments to the blades so that their numbers correspond with those of the blades, and so that the arrow on each segment is in alinement with the arrow on each blade bushing. Tap the spring packs into place, using a brass drift.

Select a 0.015 inch shim for each blade, coat with grease, and install on the blade bushings over the shim-plate drive pins. The purpose of these shims is to regulate the clearance between the blade thrust-bearing assembly and the barrel, to compensate for manufacturing tolerances. Therefore, the proper shim thickness to give the specified blade torque must be determined at assembly by trial. It has been found that a shim of 0.015 inch thickness is quite likely to give the proper torque, and this thickness is recommended for the first trial assembly. After the proper torque has been obtained, number the shims to correspond to the blade numbers and remove any high spots caused by the numbering. Only ONE shim should be used in each blade assembly.

Coat the shim plates with grease and install one on each blade over the above mentioned shims. It

is essential that the shim be installed as indicated, that is, BETWEEN THE SHIM PLATE AND THE FLANGE OF THE BLADE BUSHING. Make sure that the number on the shim plate corresponds with the blade number.

ASSEMBLY OF HUB AND BLADES

With the halves of the barrel removed, install the blade assemblies on the proper spider arms, which are numbered 1, 2, and 3 to correspond to the blade numbers. See that the "O" etched on the inside thrust race of each blade is alined with the "O" stamped on the blade butt flange. Before pressing the blades against the spider shim-plate bearing bosses, be sure that the shims and shim plates are in their proper places over the shim-plate drive pins.

Install the thrust bearings between the thrust-bearing races on the blades, two half bearings on each blade, and blade chafing rings. These bearings are interchangeable among the blades. While holding the thrust bearings in place, raise the rear half of the barrel, making sure that the barrel and spider markings are in the proper relation. The barrel should be a light drive fit over the bearing races. After properly starting the barrel over the races, drive it into place with a nonmetallic mallet. Lay the barrel seals in the grooves provided in the rear barrel half, making sure that the small tips on the ends of the seals are entered in the $\frac{1}{32}$ inch diameter grooves at each blade socket.

CARE SHOULD BE TAKEN TO AVOID DAMAGING THE SHARP EDGES OF THE PARTING SURFACES OF THE BARREL (adjacent to the blade packings) TO INSURE PERFECT OIL SEAL. Install the front barrel half in the proper angular position and drive it down

until there is about ½ inch clearance between the barrel parting surfaces.

The 12 barrel bolts, which are numbered to correspond to the numbers on the spotfaces on the barrel, should now be installed. The three long bolts, one of which is adjacent to the leading edge of each blade, hold the de-icer discharge nozzles. When no de-icer is installed, two washers are used on each of these three bolts. The remaining nine bolts are installed without washers. Check the barrel seals to be sure that they are in place and draw the barrel halves together tightly with the bolts. Check the frictional blade torque. If the torque of each blade does not fall between the proper limits, make such changes in the shim thicknesses (under the blade shim plates) as are necessary to bring the torque within the limits.

Loosen the barrel bolts and spread the barrel halves about 0.010 inch at the parting line. Thoroughly coat each ring of the blade packing with engine oil and insert in the space provided between the barrel and the blade chafing ring.

DOME ASSEMBLY

Before the dome is assembled you must determine the gear preload and adjust it to within the required limits. Install the cam ball bearings in the ends of the stationary cam so that the word "OUT" etched on each cam can be read when looking at the base of the cam. Insert the rotating cam in the stationary cam and drive it into place by dropping the assembly several times from about a 1-foot height so that the gear lands squarely on a clean hard wood block.

Install the cam ball bearing nut and tighten it sufficiently to cause the bearings to bind slightly. Then drop the assembly again as above. If necessary, tighten the nut again to get the same amount

of binding and then back it off two cotter pin holes. After this, the bearings will be so adjusted that the cams will rotate without binding. Lock the nut with a ½ inch x 3/32 inch cotter pin inserted from the outside.

Turn the cams so that the letters "O" etched in the bottom of one cam slot in each cam are in alinement. Place four cam-slot rollers on each cam-slot roller bushing, and install the four assemblies in the cam slots with the bushing flanges toward the outside.

Slip the piston over the cam assembly so that the "O" stamped on the boss of one of the cam-slot roller shaft holes is in alinement with the "O"s in the cam slot. Insert the four cam-slot roller shafts in the piston with the tapped holes toward the outside, and drive them in until their outer ends are just flush with the outer surfaces of the piston. To facilitate installation of these shafts, insert a ½-inch 0.13 U. S. Std. Thd. bolt in the tapped hole at the end of the shaft, and drive the shaft in by striking the head of the bolt with a hammer. Insert the four cam-slot roller shaft screws in the skirt of the piston and tighten them securely. These screws carry a pipe thread and are not provided with additional means of locking.

Install the piston gasket and nut. To facilitate holding the piston while tightening this nut, it is advisable to insert a ½-inch 0.13 U. S. Std. Thd. bolt in each of two opposite cam-slot roller shafts. Pull up the nut as tightly as practicable, and aline a lock-screw hole in the nut with a milled slot in the piston. Then insert the locking screw and safety it with a 1/16-inch x ½-inch cotter pin.

Install the stop plate so that the three small dowel pins in the stationary cam engage the holes provided for them in the stop plate. There is only one position for this plate on the cam, as the dowel

pins are not arranged symmetrically. If any gear preloading shims are used, they should be installed between the stationary cam and the stop plate.

Slip the dome over the cam and the piston assembly, and screw into it—through the stop plate and cam base—the six flat-head screws. Be sure the heads of these screws are flush with the surface of the stop plate. Then slip the dome retaining nut over the dome and aline the hole through the threads of the nut with the milled groove in the lip of the dome ball race. Insert 98 balls and close the hole with a welch plug. Now insert the positive high-pitch stop ring and the positive low-pitch stop ring at the specified blade angles. Then balance the assembly.

Stretch the dome and barrel seal over the base of the stationary cam so that its unbeveled edge lies adjacent to the dome flange. Install the breather hole seal in the front of the dome—V edge going in first. Put the dome breather hole nut (or the dome breather cup) in place, and fasten with the lock wire.

VALVE ASSEMBLY

Insert the distributor pilot valve in the sleeve of the valve housing, with the smaller end toward the Allen plug. Place the spring and washer in the spring housing (in the order mentioned) and lay the flat copper gasket in its place on the open end of the spring housing. Hold the valve housing with the Allen-plug end up, and screw the spring housing in from the bottom. This avoids the possibility of the washer becoming wedged under the spring housing. Tighten the spring housing until the gasket is firmly seated, and safety it with 0.040-inch brass wire inserted through the hole in

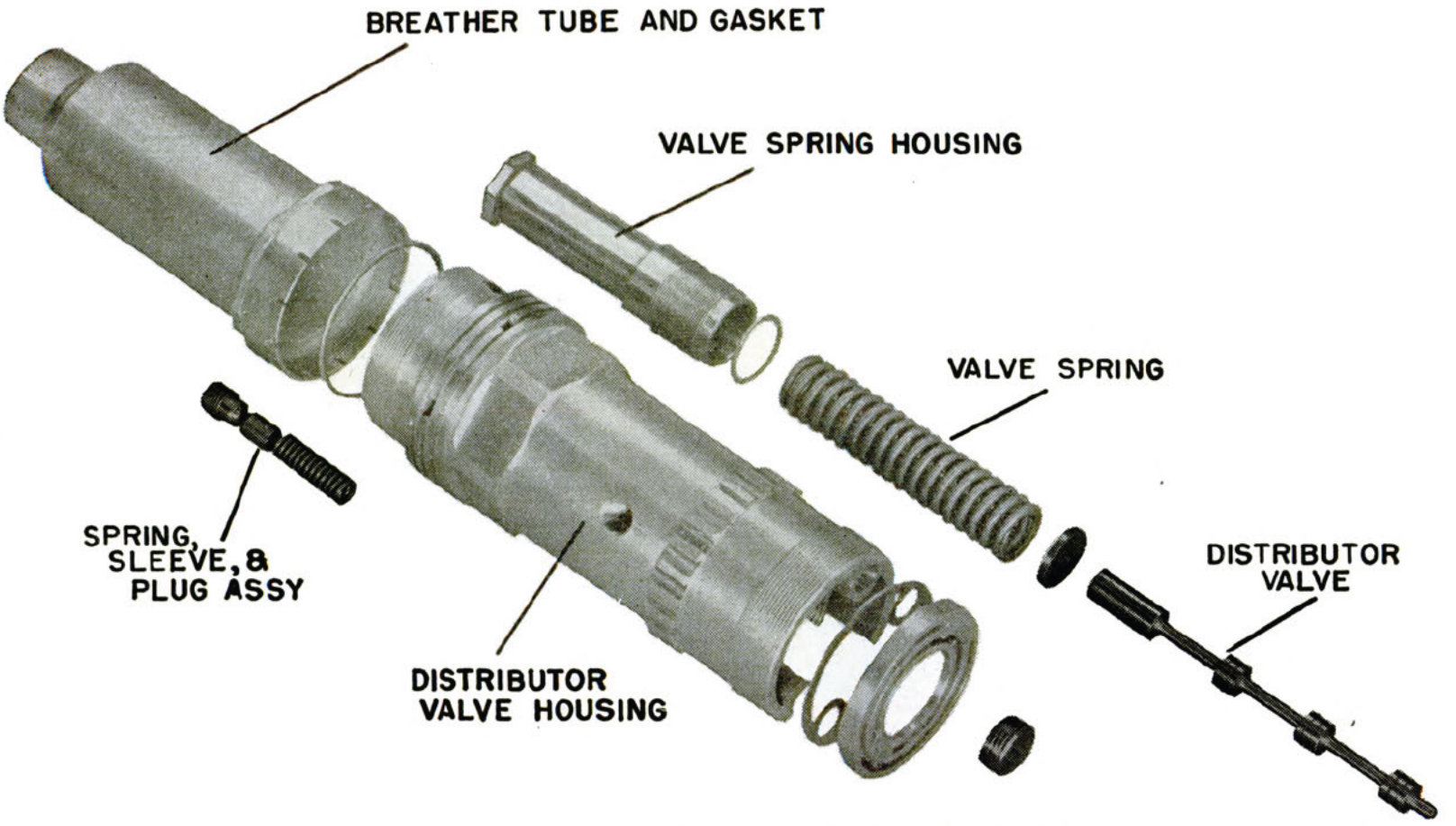

Figure 46.—Valve assembly for propellers breathing through shaft.

the valve housing which is alined with a milled slot in the spring housing.

Insert the dome pressure relief valve spring and sleeve (in the order mentioned) into the valve housing, making sure that the beveled end of the bronze sleeve (which is the ball seat) is outermost. Screw the ball and plug assembly down tightly on them. Since the plug carries a pipe thread, no additional means of locking is provided.

Install the four oil seal ring expanders and the four oil seal rings in the grooves provided on the valve housing. Put the $\frac{1}{32}$-inch copper gasket over the two dowel bushings which extend from the rear end of the valve housing. Install the oil transfer plate on these bushings. These bushings are of two different diameters, as are the holes in the plate. Hence the plate can be installed in only one position.

For engines which breathe through the propeller shaft (see fig. 46) the oil transfer plate has a $1\frac{1}{4}$-inch hole through its center for the passage of breather gases.

For engines which do not breathe through the propeller shaft, the hole does not go through the center of the plate, but connects with the dome oil pressure line in the side of the valve housing.

Engines which breathe through the propeller shaft require that the breather tube be installed on the valve housing. Insert the copper-asbestos gasket in the front end of the breather tube to the housing—drawing it up TIGHTLY—and safety it with a brass wire through a slot in the skirt of the tube and the hole drilled into the dome-pressure duct in the valve housing. The propeller with distributor valve assembly is shown in figure 47.

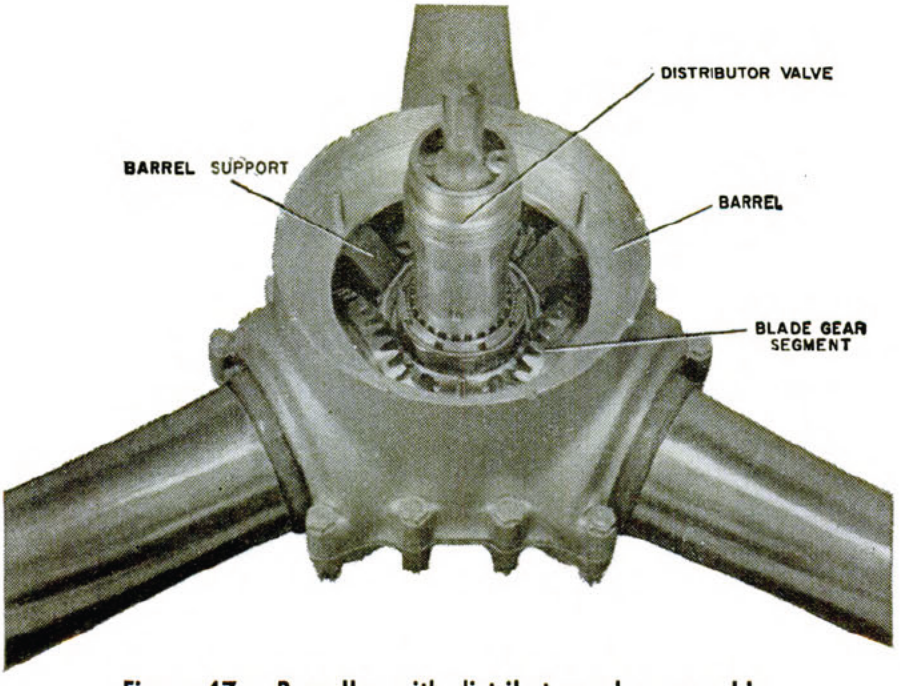

Figure 47.—Propeller with distributor valve assembly.

DE-ICING EQUIPMENT

The following parts make up the de-icing equipment for the Hydromatic Propeller—

Blade discharge tube and bracket assembly.
Slinger ring assembly.
Shield and feeder tube assembly.

After proper adjustment of the blade packing nuts, and before tightening the barrel bolts, place a discharge tube bracket over the barrel bolt boss at the leading edge of each blade arm. Set the clearance between the end of the tube and blade shank at $1/16$ inch.

Tighten up the barrel bolts. With the packing between the spider and rear barrel installed, place the slinger ring over the rear-barrel packing gland and insert the eight screws through the slinger ring and plate. Connect the slinger-ring nipples to the blade discharge tubes by means of hose connections. Safety the wire hose connections

in place. Then balance the propeller. Before mounting the propeller on the engine shaft, the shield and feeder-tube assembly should be mounted on the front section of the engine.

Propellers for Wright engines are supplied with a single thrust-bearing cover plate to replace the one already mounted on the engine. Propellers for P. & W. engines are supplied with ten individual spacers to replace the 3/8-inch spacers already mounted on the engine. On P. & W. engines, remove the hold-down nuts of the engine's front section thrust-bearing cover plate, and take out the spacer washers. Install shield over the studs, with the opening for the feeder tube toward the top.

Install the fixed bracket for the feeder tube through the cut-out in the shield and over the two upper studs near the top of the shield after spacers are in place. Place the spacers supplied with the propeller over the studs, and bolt the assembly down tight.

On Wright engines, the same installation procedure applies, with the exception of the individual spacers. For Wright engines, a ring spacer is provided, which takes the place of the thrust-bearing cover plate. Install the feeder tube through the cut-out in the shield and secure loosely to the fixed bracket. After the propeller is mounted, adjust the feeder tube sliding bracket until the feeder tube clears the slinger ring by 1/32 inch. Install cover plate over the shield, and safety-wire it in place. Then connect the de-icing fluid supply pipe to the 1/8 I. P. T. connector.

BALANCING

All balancing should be done with the assembly centered on its cone seats, and mounted on a hardened and ground mandrel (or a knife-edge

balancing stand) which must be in accurate alinement. Be certain the room in which you're working is free of air currents.

Once you have the DOME ASSEMBLY on the balancing stand, it must show no persistent tendency to rotate from any angular position. Adjust the balance by the use of lead in the balancing holes provided in the base of the fixed cam.

Blade balancing washers will help you obtain COARSE BALANCE. "D" and "E" shank blades must have at least one and not more than five washers, excluding the lock washer. "F" shank blades need at least one—and not more than six—washers, excluding the lock washer. The coarse balance is made with the assembly dry, and with the blades set at 30 inches at the blade reference station. (The reference station of blades having a basic diameter of 14 feet or less is the 42-inch section.)

The final balance of the COMPLETE PROPELLER (except for the distributor valve) is obtained by the use of lead in the barrel bolts. The balance is obtained with the propeller dry and with the blades set at 30° at the blade reference station. With one blade of two or four-bladed propellers placed successively in the horizontal and vertical positions, or with each blade of three-bladed propellers placed successively in a horizontal position, the propeller must not show a persistent tendency to rotate.

INSTALLATION

The hydromatic propeller, as prepared for installation on the engine shaft, consists of three sub-assemblies—the hub and blade assembly (including the hub retaining nut and front cone); the distributor valve assembly; and the dome assembly. Whenever possible, the sub-assemblies

and hub attaching parts for each propeller should be kept together as a complete assembly. The distributor valve assemblies of the same type are interchangeable. Dome assemblies are interchangeable if checked with the hub assembly for balance and gear preload.

Now, for the steps of installation—

Coat the engine shaft and cones with engine oil and install the propeller barrel and blade assembly on the propeller shaft, sliding it back only far enough at first to engage the threads of the propeller retaining nut with those of the shaft.

Tighten the propeller retaining nut on the shaft. Determine if one of the locking slots in the nut is in alinement with one of the holes in the propeller shaft. If not, repeat the tightening procedure until one slot and hole are in alinement. Spacing of the slots in the nut is such that alinement of a slot and hole will occur each five degrees of rotation.

Check to be sure that the $\frac{1}{32}$-inch copper gasket (provided by the engine manufacturer) is in place against the adapter flange inside the propeller shaft. Examine the valve-housing oil transfer plate on the base of the distributor valve assembly to be sure that it is properly in place, with the $\frac{1}{32}$-inch copper gasket between it and the valve housing. The oil transfer plate, for use with engines which breathe through the propeller shaft, has a $1\frac{1}{4}$-inch hole through its center to allow engine breathing. On the plate for use with engines which do not breathe through the shaft, the hole in the center does not go through the plate, but connects with the dome oil-pressure line in the side of the valve housing.

Oil the threads of the valve assembly. Screw it into the shaft and tighten it. If the locking slots in the valve housing are not alined with holes in

the propeller shaft, repeat this tightening operation until the slots and holes are in alinement. Under no conditions should the valve housing be backed off even slightly in order to obtain slot and hole alinement. If alinement cannot be obtained, a new gasket should be used or the original gasket should be lapped slightly.

Install the locking ring, with the pin through the retaining nut slot, propeller shaft hole and into the valve housing slot. Snap the wire into position in the groove provided for it in the retaining nut.

On propellers for engines which breathe through the propeller shaft, the breather tube is installed on the distributor valve assembly before the propeller is shipped from the factory. If, for any reason, this breather tube has been removed, check it to be sure that it is screwed tightly to the distributor valve housing. It should be safetied with a brass wire through a slot in the skirt of the breather and the hole drilled into the dome-pressure duct in the valve housing.

In some cases, depending on the blade design, it is necessary to limit the full-feathering blade angle to slightly more or less than 90° (at the 42-inch station) in order to eliminate any tendency of the propeller to windmill forward or backwards when feathered. Propellers, in these cases, are provided with stop pins which limit the blade angle to other than 90°.

Before installing the dome assembly on the propeller. the low-pitch limit and high-pitch limit adjustments should be made. This is done by setting the low- and high-pitch stops to the respective positions desired.

On engines which breathe through the propeller shaft, remove the breather cup lockwire, unscrew the breather cup, and remove the seal from the

front end of the dome assembly. Make certain that the dome and barrel oil seal is properly installed around the stationary cam base against the dome.

When installing the dome assembly, it is ABSOLUTELY ESSENTIAL that the cam gear in the dome be meshed with the blade-gear segments in the proper angular relationship. The following steps should be carried out to insure correct meshing—

Move the piston in the dome assembly into the extreme forward position. This position will be reached when the cam-gear stop lugs are against the high-pitch stop lugs. Turn each blade to the high-pitch position against the stop pins. Slide the dome assembly over the end of the valve assembly, making sure that the oil-seal rings on the valve assembly enter properly into the sleeve inside the piston. Turn the dome in a counterclockwise direction until the dowels in the barrel dome shelf engage the alining holes in the stop-locating plate. The cam gear and blade gears are now in proper alinement and the dome assembly should be moved, without turning, into the barrel until the dome retaining nut can be started in the threads in the barrel.

On engines which breathe through the propeller shaft, make sure that the breather tube on the front end of the valve assembly is properly started in the hole in the front end of the dome. Turning the dome assembly in a clockwise direction in order to aline the dowels and holes should be avoided, as this will tend to move the stop lugs on the rotating cam away from the high-pitch position, thus allowing the gears to mesh incorrectly.

Tighten the dome retaining nut. With the dome assembly properly seated in the barrel, the front face of the dome retaining nut will be ap-

proximately flush with the front edge of the barrel. The dome unit must be firmly seated on the retaining shoulder in the barrel. Tightening of the dome retaining nut, in addition to fastening the dome unit to the hub, serves to apply the preloading force to the gears, and to compress the dome and barrel seal. Its tightening, therefore, requires a relatively high wrench torque. Failure to tighten the dome unit securely in the hub will result in elongation, or failure, of the assembly screws which fasten the dome cylinder and the stop-locating plate to the stationary cam.

Install the dome retaining-nut lockscrew, and safety the screw with a $\frac{1}{16}$-inch x $\frac{1}{2}$-inch steel cotter pin.

On engines which do NOT breathe through the propeller shaft—

Make sure that the dome breather-hole in the front of the dome is tight, and that the lock wire is in place.

On engines which breathe through the propeller shaft—

Insert the gasket between the breather tube and the front end of the dome.

Install the breather cup, and safety it with the locking ring provided.

Shift the propeller into full low pitch by using levers to turn the blades, and check all three blade angles by the index lines on the blades and the graduations on the barrel—or with a protractor. These angles should be equal, and should agree with the low-pitch stop setting. This check indicates that the correct relationship between the blade gears and the cam gear has been obtained. Also check all external lock wires and cotter pins.

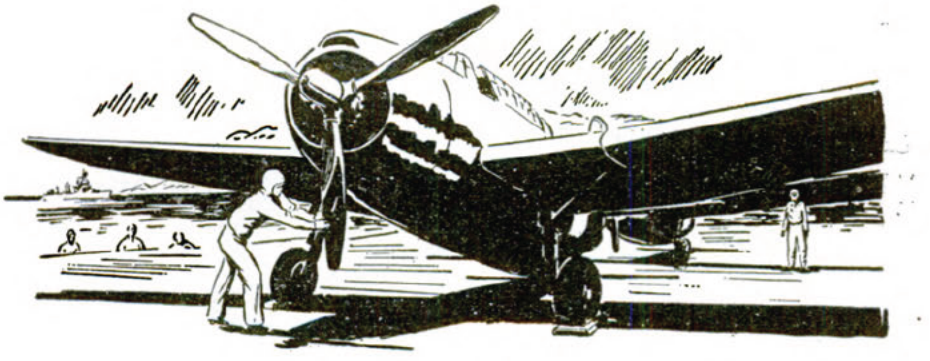

CHAPTER 5

THE ELECTRIC PROPELLER

FACTS AND FIGURES

The electric propeller depends upon electricity for changing its pitch. It can operate either as an automatic-controllable OR as a fixed-pitch propeller. Steel-bladed propellers can be equipped with a type of cuff that gives additional airblast for cooling radial air-cooled engines. Dural-bladed propellers, being of different design, do not require cuffs.

Furthermore, some electric propellers have a reversible pitch, for greater maneuverability. On flying boats equipped with electric propellers, the direction can be reversed on the water for getting in or out of tight spaces.

One of the most prominent features on an electric propeller like the one in figure 48 is the motor and speed reducer at the front-and-center of the hub. Inside that housing is the heart of the electric pitch-changing mechanism.

The POWER UNIT contains the adapter plate, speed reducer, motor, and brake assembly. At the inboard side of the propeller you sometimes find a part known as the SLINGER ASSEMBLY. This

is part of the de-icing unit, and is not found on all electric propellers. The pitch-changing mechanism is also known as the PROPORTIONAL GOVERNOR CONTROL SYSTEM.

The purpose of the governor is to maintain the engine at a set, constant speed by changing the propeller-blade angle. This control system con-

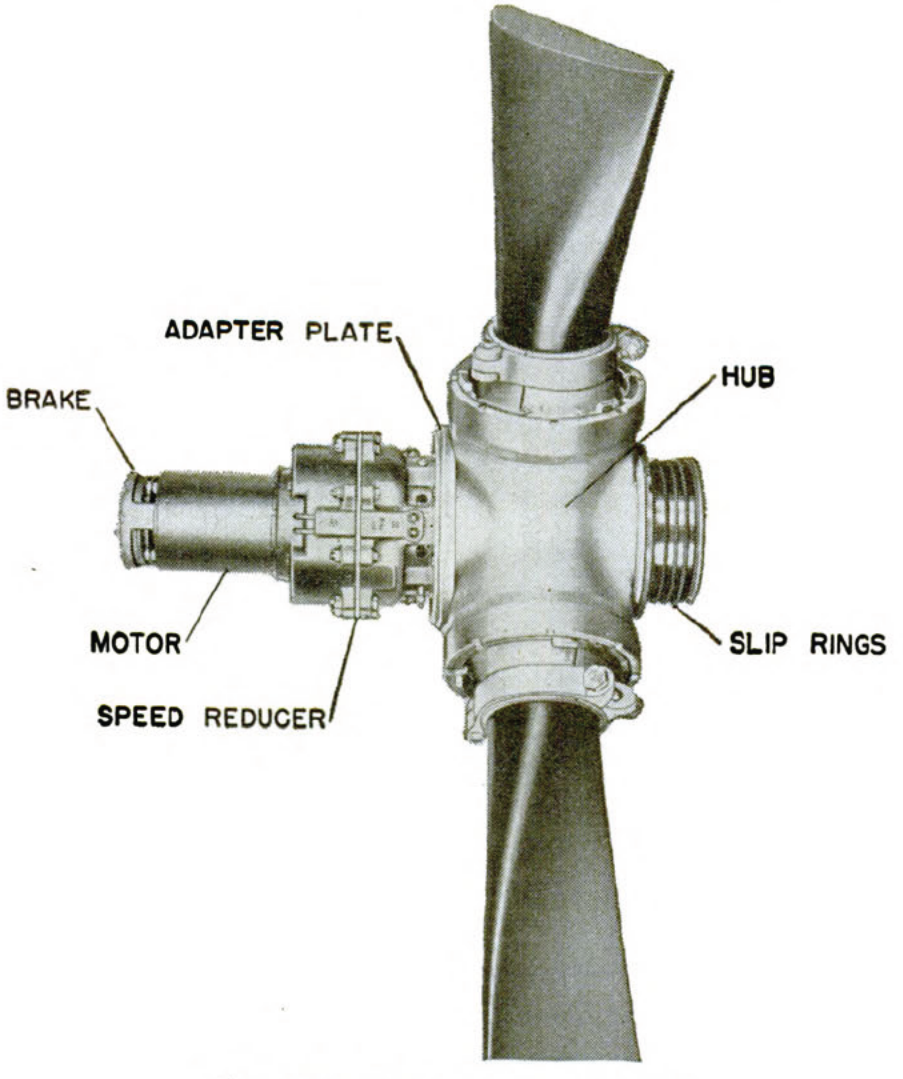

Figure 48.—Electric propeller assembly.

sists of two major assemblies designated respectively as the UPPER CASE and the LOWER CASE. The upper case incorporates a RACK, PINION, and LEVER which function together to control the force of

the flyweight spring. The lower case contains an OIL PUMP, a RELIEF VALVE, a PRESSURE SWITCH, a FLYWEIGHT SPINDLE ASSEMBLY, and a CONTACT MECHANISM.

Where a faster rate of pitch change for feathering or reversing is desired, a VOLTAGE BOOSTER may be added to the train of controls.

The HUB used on an electric propeller is machined from a single solid forging of alloy steel. On the rear of the hub, you'll find four bronze slip rings, insulated from the hub and each other.

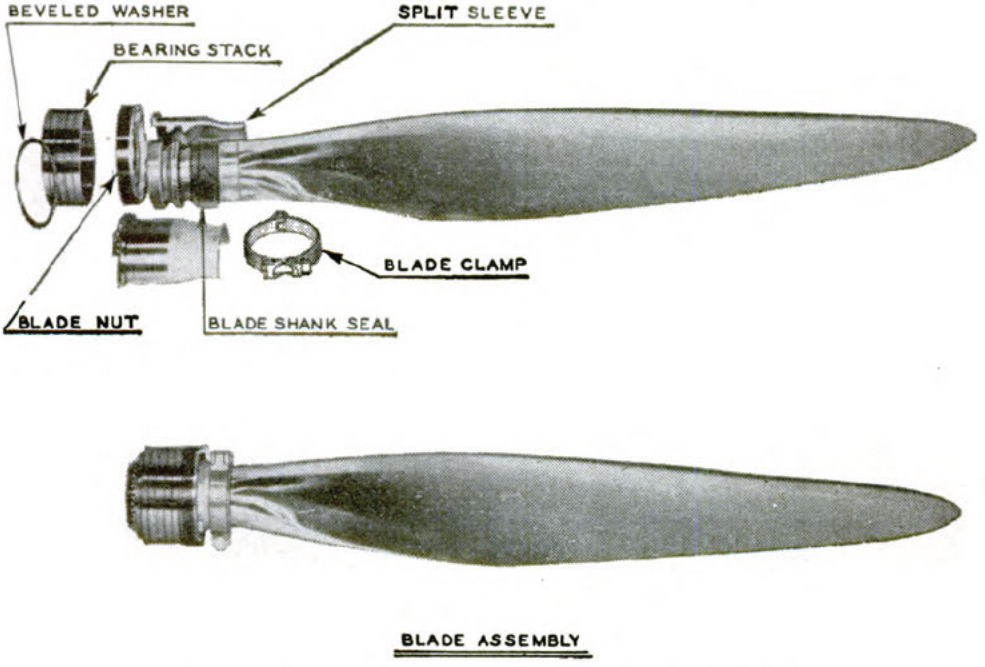

Figure 49.—Blade and gear assemblies (aluminum).

Four insulated brass connector rods carry the electrical circuits through passages from the slip rings to contacts at the front face of the hub. The blade assemblies are inserted into the hub barrels and are held in place by retaining nuts.

Figure 49 shows the BLADE ASSEMBLY for the aluminum propeller, and figure 50 shows the blade assembly for the steel propeller. Steel blades are formed by welding together two formed sheets

of electric-furnace-processed alloy steel. The shank and back of the blade are formed from one sheet, and the face from the other. The atomic-hydrogen welding process, which gives a high-strength and uniform weld, is used to join the two plates along the leading and trailing edges in a seam that converges at the shank and extends to the tip end of the blade.

The shank end is internally threaded to receive a spiral bevel gear, which is pinned in place. A stack of angular-contact-type, anti-friction bearings is placed on the blade shank together with a retaining nut. The bearing stack permits free rotation of the blade in the hub under high centrifugal loads.

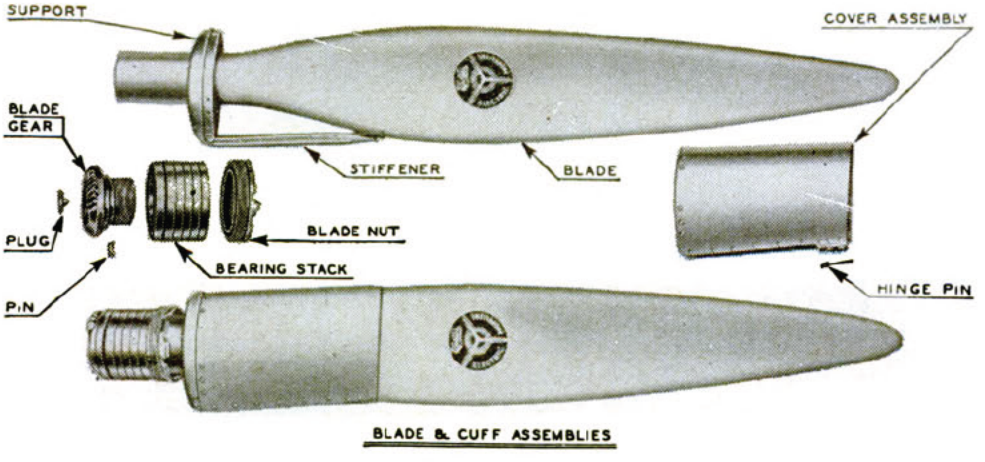

Figure 50.—Blade and cuff assemblies (steel).

Blade shank cuffs, which assist in the distribution of air to radial-engine cylinders, may also be placed on the blade. The cuff consists of a cast magnesium support and a stiffener to which a formed sheet (cover assembly) is attached by screws. The entire cuff assembly is held in position by a shoulder on the blade.

Aluminum blades are made by casting and forging to shape. The main difference over steel

is the blade retention in the hub. Naval aircraft use both aluminum and steel blades.

Figure 51 shows the POWER GEAR ASSEMBLY. The power gear is a bevel gear which meshes with the blade gears. It is internally splined to engage with the low-speed splined drive of the speed reducer. This power gear is equipped with an angular-contact type thrust bearing, which absorbs the power-gear thrust and is mounted in a steel adapter plate. The adapter plate also serves as a mounting for the power-unit cover or propeller spinner, if either part is used.

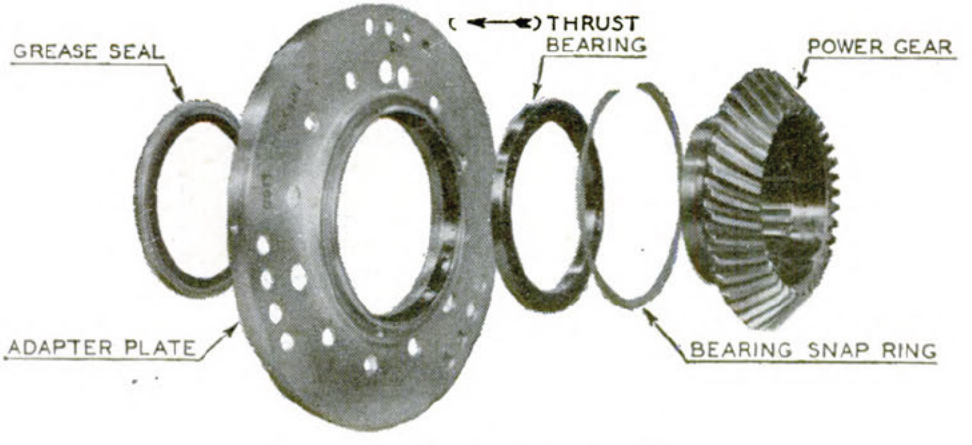

Figure 51.—Power gear assembly.

The SPEED REDUCER assembly is seen in figure 52. It consists of two stages of planetary-type reduction gearing, contained within an aluminum alloy housing. The rotating parts are fitted with ball bearings to provide maximum efficiency and also to facilitate assembly. The gear teeth are surface hardened to insure long service life. Gaskets between the front and rear housings, and seals at each end, make the unit oil-tight and eliminate the necessity for frequent lubrication of the enclosed parts. The unit is partially filled with an oil having an extremely low pour-point, thus pro-

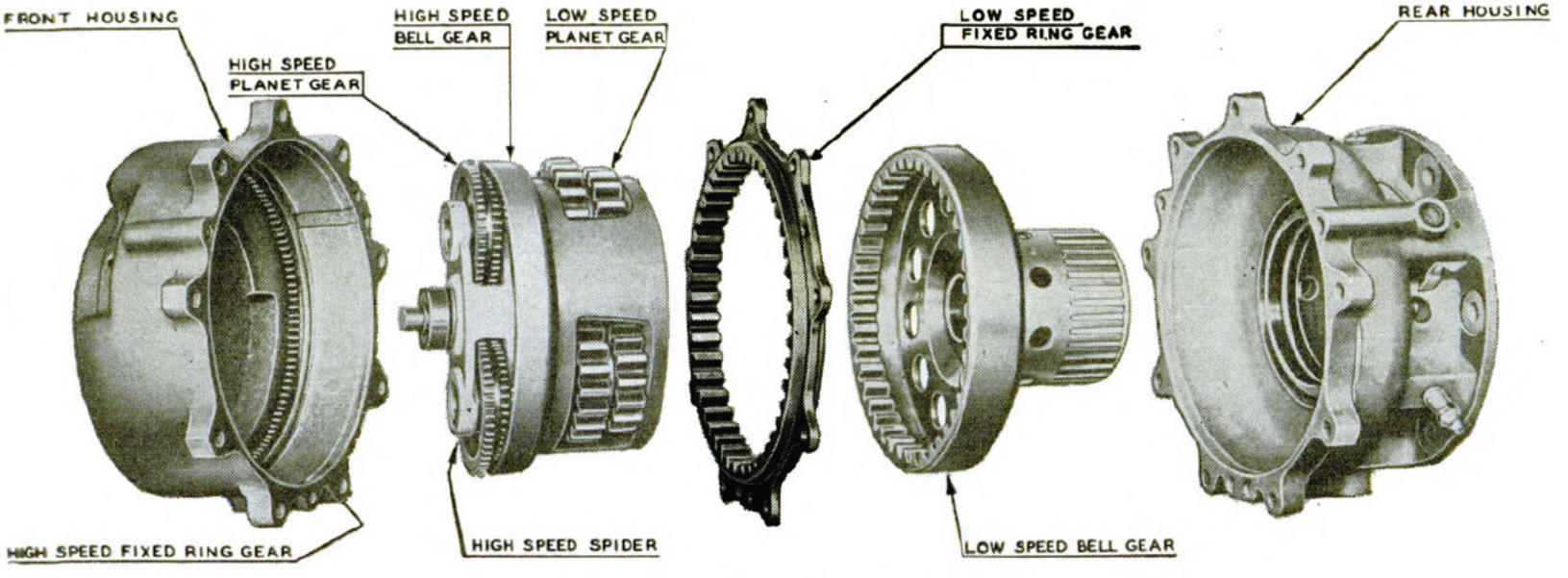

Figure 52.—Speed reducer assembly.

viding a continuous oil bath for the speed reducer gears. The low pour-point insures unrestricted operation at the low operating temperatures encountered at high altitudes.

At the hub of the speed reducer are located blade angle LIMIT SWITCHES which are operated by pivot arms riding on a cam attached to the low speed bell gear of the speed reducer. The limit switches, shown in figure 53, are connected in the

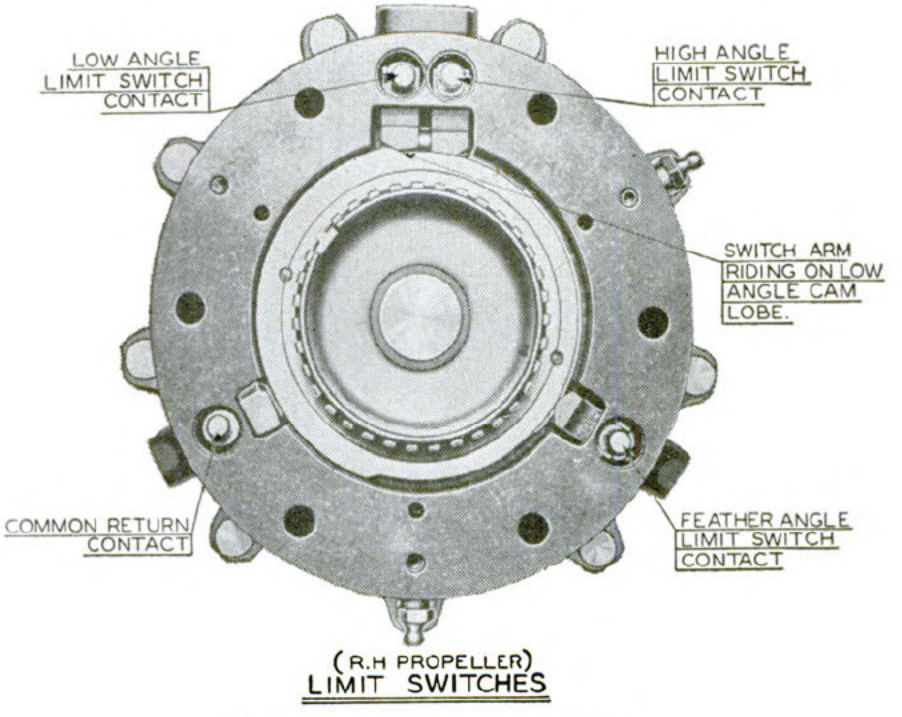

Figure 53.—Limit switch assembly.

electric motor leads. They are spring-loaded electrical contacts which, upon installation of the power unit, mate with the fixed contacts on the front face of the hub. As the switch arms ride on their respective cam lobes, the contacts are retracted and the circuits are opened. By their location, the cam lobes accurately control the low, high, and feather blade-angle settings. Reverse thrust propellers have an ADDITIONAL limit switch

replacing the common return contact, to halt the pitch change at the NEGATIVE angle setting.

A magnetic brake assembly, as in figure 54, is mounted on the front of the pitch-change motor. It consists of a brake hub, keyed to the armature shaft, a brake lining splined to the hub, and a steel brake plate supported by a diaphragm and held against the brake disk by coil springs. A solenoid coil, connected in series with the electric motor, is located behind the steel plate. When the motor is operated, the solenoid is energized, thereby releasing the brake. When the motor is not operating, the solenoid is not energized, and the brake is applied by the spring forces.

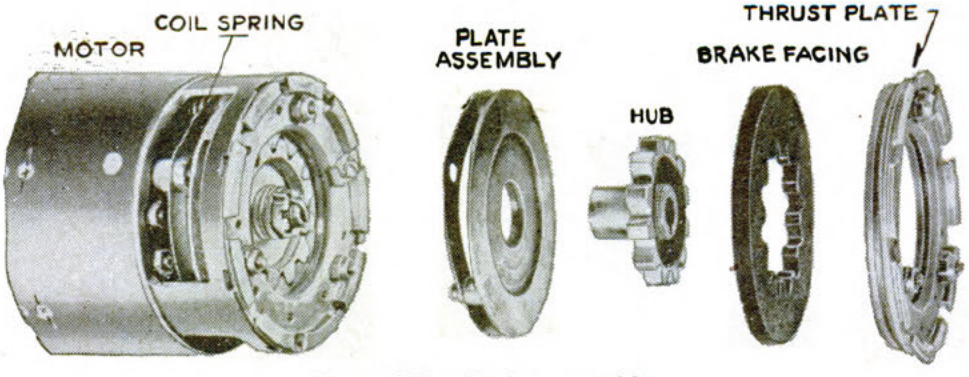

Figure 54.—Brake assembly.

The pitch change motor assembly, seen in figure 55, is attached to the front housing of the speed reducer, and the armature is fitted to the driving pinion of the high-speed stage of the speed-reducer unit. The motor is of the series type, and has two field windings which provide for rotation in either direction.

An aluminum alloy housing bolted to the nose section of the engine incorporates a mounting for the slip ring brush holder assembly, also called the brush cap. This assembly is shown in figure 56. Quick removal of the brush holder from the housing is made possible by trunk type

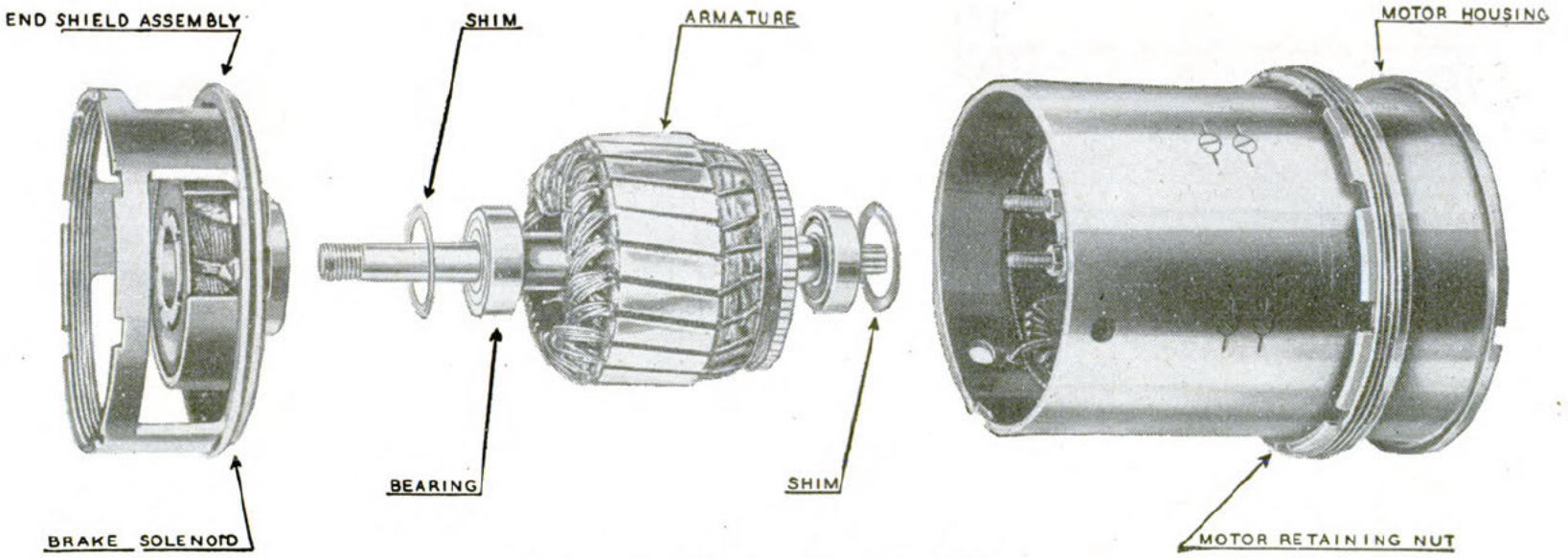

Figure 55.—Motor and brake assembly.

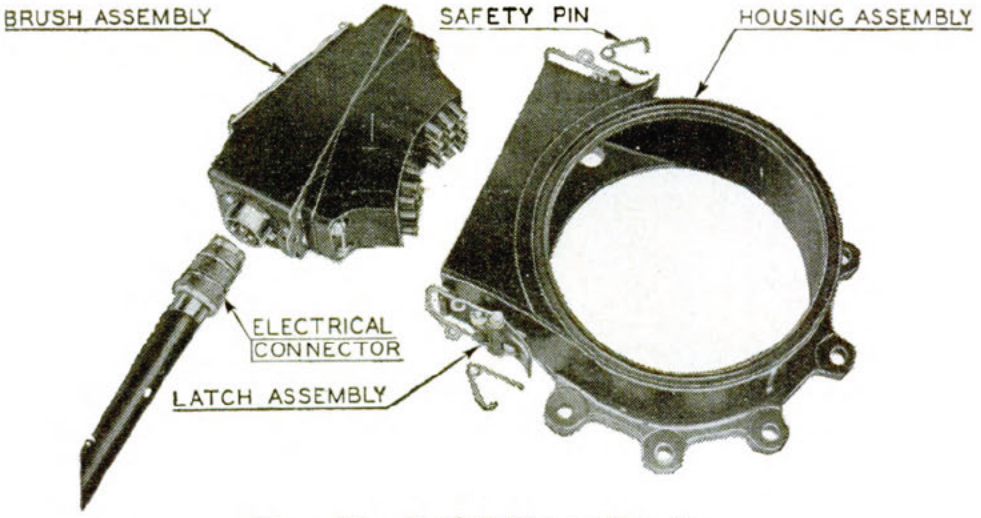

Figure 56.—Brush holder and housing.

latches. An electrical connector permits complete removal of the assembly from the airplane. An early-type holder is mounted to the cap with vibration absorbing bushings. A later-type holder, of molded composition, may be attached directly to the cap without shock mountings.

HOW IT WORKS

Suppose your airplane is equipped with an electric propeller, and you have set your rpm control for 2,000. When your engine is started and gets warmed up, assume that it's actually turning at 1,800 rpm. The governor will now go to work. Current from the airplane's electrical system is fed into the SLIP RINGS at the inboard end of the hub by the BRUSHES. The slip rings, seen at the right in figure 48, are made of bronze and are carefully insulated from the hub and from each other. As the propeller rotates, the rings rub against the brushes and pick up the current from them.

The current is carried inside the hub through connector leads from the slip rings. It flows through leads in the speed-reducer assembly and

on into the motor—the simple armature motor you saw in figure 55. This motor, you'll recall, has two field windings so that it will run in either direction, and is of the series (not parallel) type. The inboard end of the armature is fitted to the driving pinion of the high-speed stage of the SPEED REDUCER unit.

The speed reducer unit stands between the motor and the outboard end of the hub. A torque has been set up in the speed reducer by the current turning the armature shaft. There are two FIXED RING GEARS—low and high speed—and two planetary gears, also high and low speed, in the speed reducer. The high-speed gears take the torque from the motor and pass it along to the low-speed gears. These gears, in turn, pass the torque—now reduced in speed—along to an outer bell gear.

The speed reducer has a two-piece housing and oil-sealing gaskets front and rear. Its gears work in a continuous oil bath, and, since the assembly is oiltight, they do not need additional lubrication very often. Oil with an extremely low-pour point is used in it to assure dependable lubrication at high altitudes and low temperatures.

The POWER GEAR, which can be seen by referring to figure 51, lies between the speed reducer and the blade-shank gears. The job of the power gear is to drive the bevel gears located on the blade shanks.

Movement of the blade-shank gears, as you have seen, is caused by the torque originally set up by the motor. The final result is that these gears turn the blades to the proper pitch for bringing the propeller onspeed—that is, to 2,000 rpm as you indicated in setting the control in the first place.

The brake assembly has also been functioning. It has two jobs—stopping the rotation of the motor when the current is cut off, and acting as a lock to hold the blades in fixed position when no angle change is being called for. The brake disk is keyed to the armature shaft, and a steel brake plate is supported by the diaphragm and held against the brake disk by coil springs. The coil of the solenoid, connected in series with the motor, is located between the steel plate and the motor.

When the motor is operating, the solenoid is energized and acts against the spring forces. This releases the brake so that the motor is free to turn over. When the motor isn't in action, neither is the solenoid—so the spring forces hold the brake "on."

The entire power unit of the electric pitch-changing mechanism is interchangeable, and can be removed or replaced as one piece. The electrical contacts inside the power unit are spring loaded, so they automatically complete the electrical connections between the motor and the hub as soon as the power unit is attached to the hub.

There are, of course, controls that "decide" when it's time for the current to flow through the brushes and slip rings and activate the motor. They are the real brains of the pitch-changing equipment. The following are its important parts—

The GOVERNOR, a schematic drawing of which you see in figure 57, is usually mounted on the nose section of the engine. In principle it is very similar to the constant-speed governor with which you are already well acquainted. As a matter of fact, oil is also used in the electric governor, but for a different purpose.

The FLYWEIGHTS, driven by the engine, serve somewhat the same purpose as in hydraulic con-

stant-speed propellers. The governor is, basically, a single-pole, double-throw switch that is opened or closed by the flyweights.

More accurately, the flyweights don't do the actual opening and closing of the switch, but rather they actuate an OIL SERVO MECHANISM, which

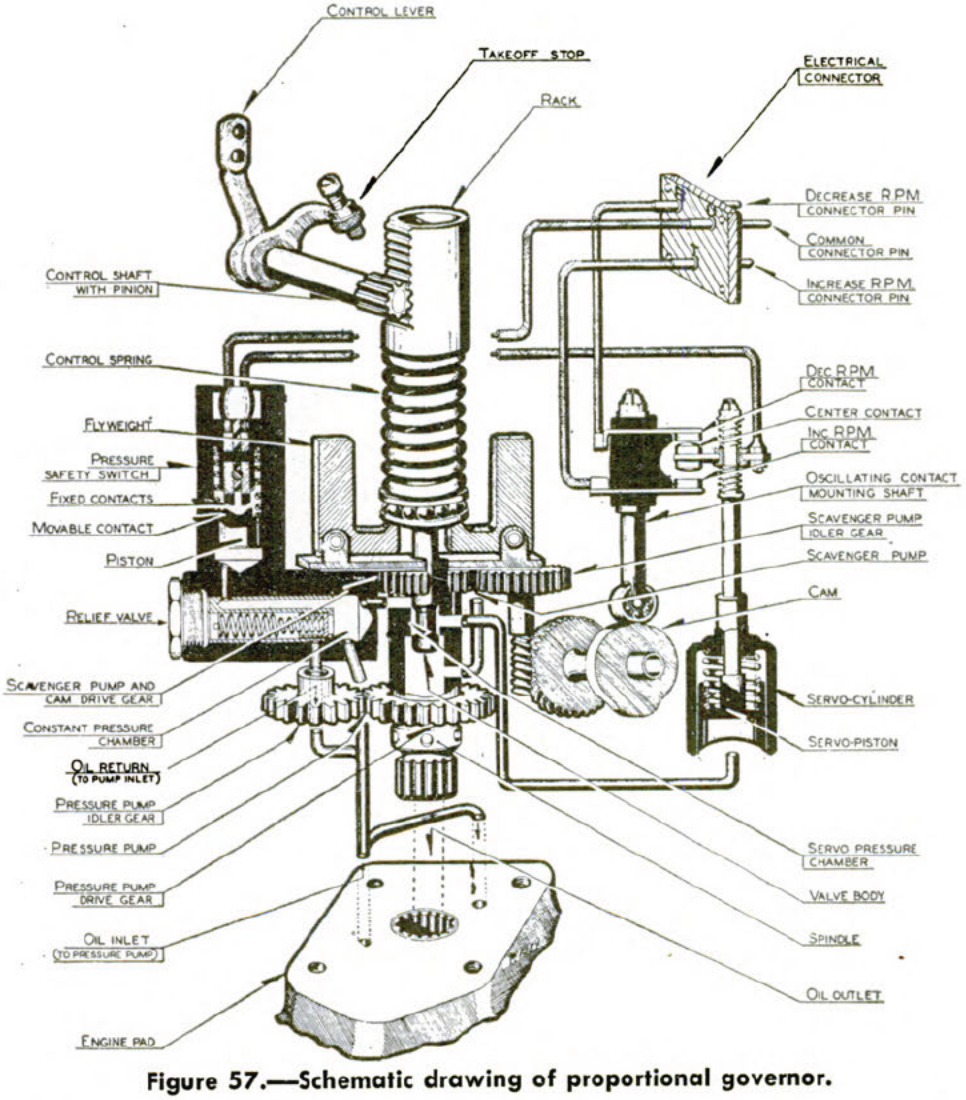

Figure 57.—Schematic drawing of proportional governor.

does the job for them. This mechanism moves the center contact of the switch either up or down. If it goes UP, it moves against a contact which closes the circuit to the motor, and makes the motor operate in ONE direction. If the center

switch moves DOWN, it touches a contact that closes the circuit to the motor for operation in the OTHER direction. Thus, depending on which way the center contact moves, the blade angles are increased or decreased.

The pressure to operate this oil mechanism comes from the engine oil system, and is regulated by a valve which is linked to the flyweights. The standard governor has an integral OIL PUMP and RELIEF VALVE which keep a constant pressure within the governor, regardless of any variations in engine oil pressure. A helical spring counterbalances the flyweight forces so that, at governing speed, the flyweight valve will supply only enough oil pressure to balance the piston of the servo unit against its spring. This holds the center switch contact in the neutral or "off" position.

With this arrangement, as soon as the flyweights move faster or slower, in accordance with engine revs, the servo piston is thrown out of balance. When the engine speed increases, the flyweights move outward because of the additional centrifugal force. This force causes the valve to increase the oil pressure to the servo. As soon as the pressure is increased, the center switch contact moves up and connects with the switch contact above it.

When the engine speed decreases, the flyweights move inward. The valve is thereby caused to decrease the oil pressure to the servo, and the center switch contact moves down to connect with the switch contact below it.

The next unit in the control group is the RELAY. You see the two types in figure 58. The relay is a heavy-duty switching mechanism that operates on low amperage current controlled by the governor contacts. One relay is required for each propeller and is in use during the time the propeller is operating in automatic control.

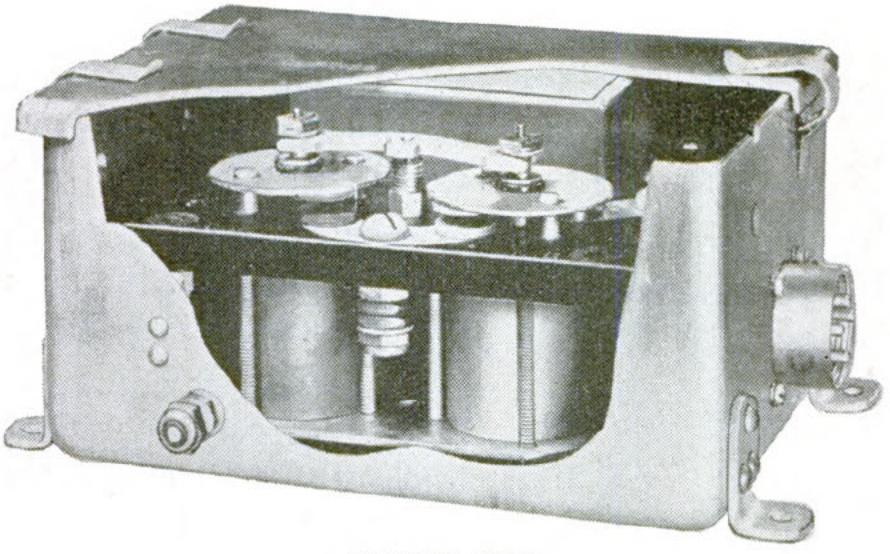

PLUNGER TYPE

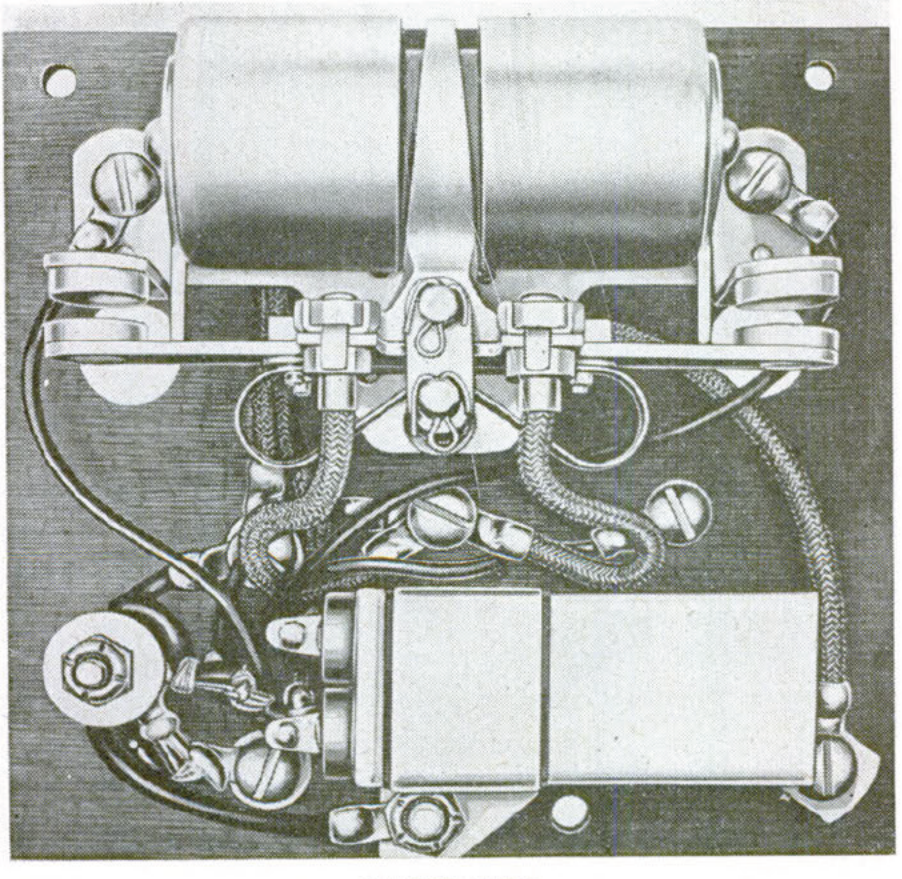

CLAPPER TYPE

Figure 58.—Plunger and clapper type relays.

When the governor points make contact, a low-amperage current flows to either one of the relay solenoid coils. This energized coil acts on the armature of the relay, which in turn causes the heavy relay points to make or break the heavy amperage propeller circuit.

Usually the relay will be mounted in the engine compartment in an accessible location, preferably on the firewall. If it is located on the engine mount, it is generally provided with a support to minimize vibration. Under usual conditions the relay will be mounted in a junction box, provided for the connection of all propeller wiring in the vicinity of the engine compartment.

There are two types of relays in Navy use, the clapper type and the plunger type. The clapper relay assembly consists of fixed and movable contact assemblies, an armature, an equalizer arm, a condenser assembly, a solenoid coil assembly, and a resistor. A base, with the necessary springs, wiring, connectors, and pins, completes the unit.

The armature consists of a T-shaped iron casting. Two transverse arms (located by four pins) are held against the head of the assembly by individual preloading springs, which bear against the arms through four self-alining bushings. The equalizer arm centers the armature between the two solenoid coils. The upper arm carries the two movable contact points which mate with the fixed contacts, mounted on L-shaped supports, to complete the circuit from the electrical power supply to the electric motor.

The armature assembly and transverse arms are mounted on a floating pin which in turn is linked, top and bottom, to a fixed pin on the coil assembly support. As the resistor across the coil in the relay circuit cannot function satisfactorily unless

the proper coil and armature alinement is obtained, the flexibility afforded by this type of linkage is highly important.

A RESISTOR is connected across the coil of the relay to damp out small fluctuating current impulses from the governor. This damping action increases the life of the points by preventing chattering and enabling the points to make and break cleanly.

CONDENSERS are connected between the propeller wiring and ground, for the purpose of smoothing out sharp electrical pulsations which in some cases produce radio interference. These pulsations are voltage surges, arising from the operation of such electrical equipment as the propeller motor, governor, and relay contact assemblies. Each condenser is equipped with an integral fuse for circuit protection, should a condenser develop a short circuit.

The points used in these relays are made of Elkonite, a very hard material, which takes on a charred gray appearance after continued service, and develops very fine pit marks. These are normal characteristics and do not affect the operation of the relay as long as satisfactory contact pressure is maintained. The Elkonite points should not be dressed or polished, as this only decreases the life of the contact and does not improve operation. The contact point material is $\frac{1}{8}$ inch thick when new. If this material becomes less than $\frac{3}{32}$ inch thick at any point due to wear or burning, the contact should be replaced. The surface of the new movable contact is slightly rounded, to facilitate the seating of the two contacts when first put into operation.

So far, you have been considering the clapper-type relay. A newer development is the plunger-

type, with which you also will want to be familiar.

The purpose of the new PLUNGER-TYPE RELAY is to provide a means of making and breaking the heavier electrical currents required to operate the new larger-model propellers. It is also of considerably more durable construction and is better able to withstand vibration than the clapper design. Another distinct advantage is that its service and maintenance are more simple than for the standard type.

The plunger-type relay is designed to be installed in the same size relay box now used for the clapper relays. The box is equipped with four hinged clips which are permanently fixed to it and which snap over the top to hold the cover firmly in place. The various parts of this relay are mounted on a molded base of synthetic material of good heat-resistant and dielectric (electrical insulating) qualities. The assembly is arranged in such a manner that all movable parts are located above the panel, while all wiring is below the panel. This eliminates the possibility of the wires interfering with moving parts. The electrical terminals are located along one edge of the panel, instead of being staggered as on older units.

All wiring between the panel and the box is combined in a harness arrangement, with sufficient allowance to permit the complete panel assembly to be partially lifted out of the box for examination of work.

The actual movable parts of the relay are two iron plungers, each carrying two contacts. Each of the plungers is actuated by a solenoid coil, mounted directly under the panel below the contacts. The movable contacts are mounted on two special alloy disks, which provide a large area

for heat dissipation, and in turn allow for the passage of larger currents without the likelihood of electrical failure. The stationary contacts are mounted on the relay base.

Each solenoid coil has a shunt resistance wound inside the housing to dampen small fluctuating currents. This design eliminates a separate part in the form of an individual resistor, which is more subject to breakage when handling.

A condenser of special construction composed of three sections is employed for reducing radio interference. This condenser is connected to the three wires from the switch panel in such a way

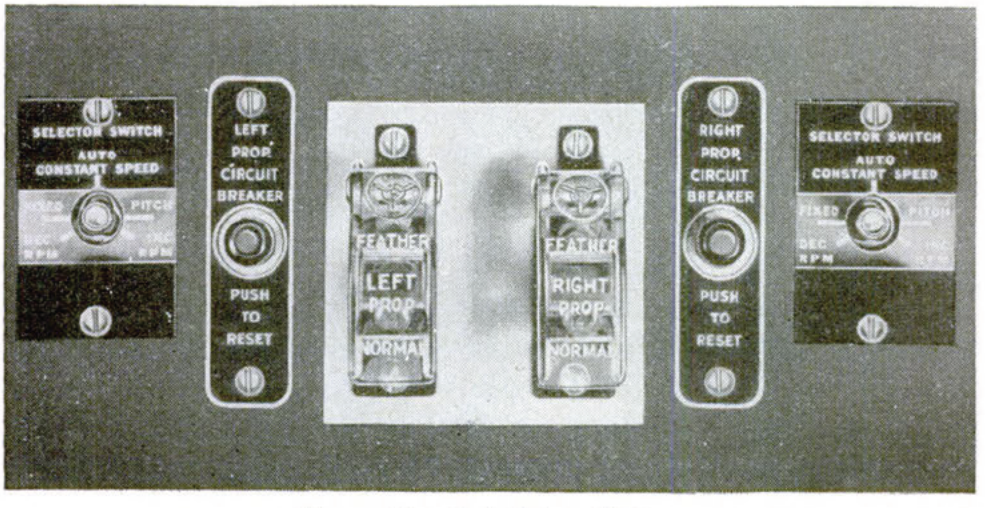

Figure 59.—Switch installation.

that radio interference is reduced to a minimum on these wires. The condenser is designed to give improved filtering action at higher radio frequencies, as compared to the old type.

The next unit in the control group is the pilot's control panel. A single engine installation will have a circuit breaker of either toggle or push-button type, and a selector switch which has four positions.

These positions are AUTOMATIC, MANUAL INCREASE, MANUAL DECREASE, and OFF. Figure 59

shows a twin engine switch installation. You will notice that it has circuit breakers and selector switches, one set for each engine. But, in addition, feather switches are there, too, since on a multi-engine airplane a propeller can be feathered to prevent windmilling.

On airplanes incorporating reverse pitch control, there will be a reverse-return switch for each propeller and one reverse safety switch.

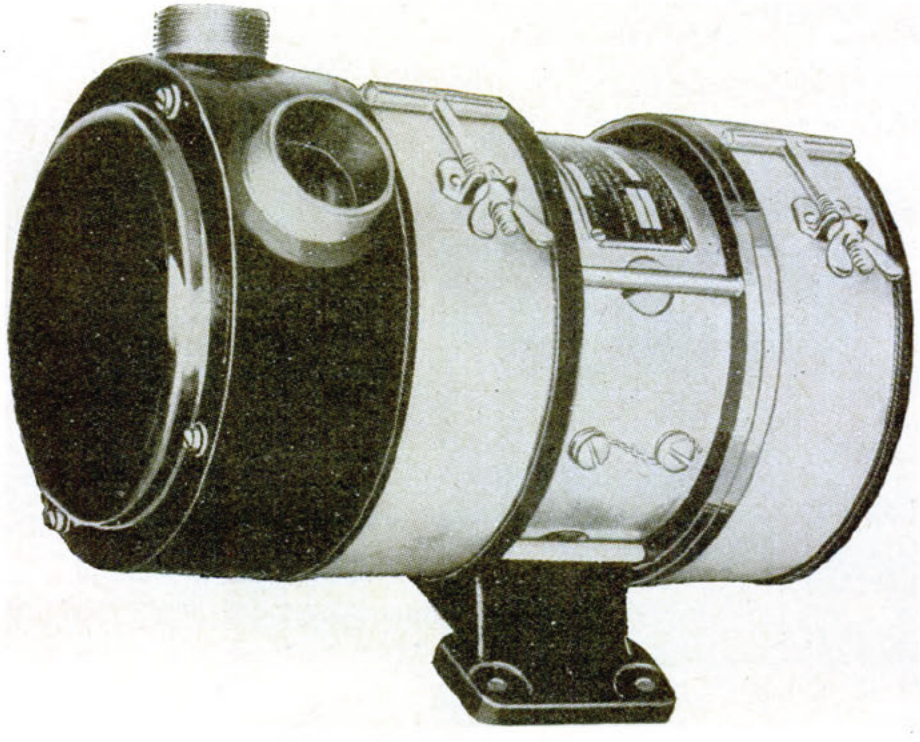

Figure 60.—Voltage booster.

On airplanes incorporating synchronizer control, there will be added a master motor switch and a master motor control knob.

You'll recall that sometimes a voltage booster is used to give a faster rate of pitch change for feathering or reversing. This voltage booster, shown in figure 60 is a single DYNAMOTOR unit, placed in the propeller circuit to increase the normal voltage. A dynamotor functions both as a DYNAMO to generate current and as a MOTOR to

operate the mechanism. By increasing the normal voltage, a rapid rate of pitch change for feathering and reversing operations can be secured.

A solenoid switch on the booster works in conjunction with the feather switch—or the reverse switch in the cockpit, to control the operating current. When the feather or reverse circuits are closed, the solenoid switch which is connected in series with these circuits puts the booster into operation automatically. Upon reaching the feather or reverse pitch setting, the limit switches in the circuits are opened.

The use of the reversible type of propeller has proved to be of great value as an aid in the water handling of large multi-engine flying boats. On a four-engine boat, for instance, the pitch of the two inboard propellers may be reversed shortly after landing on the water. This makes a substantial negative thrust available. By operation of the throttles this negative thrust can be applied in combination with the positive thrust of the outboard propellers as required, making it possible to stop or turn in a very short space—even in the presence of adverse current and winds. Reversible propellers used in this way not only make it possible to operate with safety in restricted areas but also reduce the time required to approach buoys and moorings.

To the normally used low, high, and feather angle limit-switches, a fourth is added for reverse pitch operation—to stop the pitch change when the desired angle is reached. Normal propeller operation between high and low pitch utilizes the plane's battery voltage directly.

To speed up the normal rate of pitch change for emergency feathering, an auxiliary voltage booster has been developed which provides approximately

three to four times battery voltage. This increases the rate of pitch change three to fourfold, and has become standard equipment on many multi-engine aircraft using electric propellers. The presence of this unit also makes it possible to provide an accelerated pitch change during reversal and return to low pitch. The action during reversal is much the same during fast feathering.

Switches, operated by the pilot, act to start the booster and pitch-change motor simultaneously. When the predetermined negative angle is reached, a limit switch in the propeller automatically opens, stopping both the pitch change motor and the booster. When you want to return to normal flight pitch, operation of another switch starts the voltage booster and causes the pitch-change motor to run in the opposite direction. A system of relays is provided which brings operation to a stop when the low pitch limit switch closes. It is then merely necessary to return the switches to the normal operating position for conventional constant speed or selective fixed-pitch propeller operations. An auxiliary switch that must be operated to reverse the propellers has been incorporated in order to prevent reversing of the propeller accidentally.

At the present time, experiments are being conducted on a DUAL-ROTATION propeller. This is really two propellers, one mounted ahead of the other. They rotate in OPPOSITE DIRECTIONS. If successful, this type of unit will have several advantages. With the horsepower of aircraft engines steadily increasing, designing propellers to absorb their power has become a complex problem. The blades have been made longer, but the limit has been reached in length because a certain tip clearance must be maintained. They have

been made wider, but it has been discovered that beyond a certain limit the efficiency of the propeller is considerably reduced and the stress on the hub is greatly increased. More blades have been added—some engines now using four-bladed propellers—but it has been found that these added blades cause interference, and reduce the efficiency of the propeller. For this reason it would not be practical to have a propeller with more than four blades turning in one direction.

One method of avoiding these difficulties is to mount two propellers, one behind the other, rotating in opposite directions driven by two telescoped propeller shafts. This type is the dual rotation or co-axial propeller.

The dual-rotation propeller has the advantage of not having torque reaction. Thus, when the throttle is opened or closed suddenly, the airplane does not have a tendency to roll. Such propellers require relatively heavy and complicated gearing in the engine, but for heavy, high-powered engines, the present one is a solution to the problem of designing propellers that will absorb the power.

Before you can consider yourself a propeller expert, you'll have to know something about this new 4-way electric propeller.

It has four hollow steel blades and a propeller control system incorporating the proportional type of governor. Look at figure 61 for an illustration of the 4-way propeller assembly.

One of the most important things to keep in mind about these 4-way propellers are their MAGNETIC BRAKE ASSEMBLIES.

The brake assembly, mounted on the front of the electric motor, consists of an outer brake assembly and an inner brake assembly.

In the outer brake assembly you'll find a cage, a forward brake plate fastened in the cage, an

internally splined brake facing, an externally splined hub keyed to the motor shaft, a rear brake plate and its supporting diaphragm, four coil springs and a solenoid.

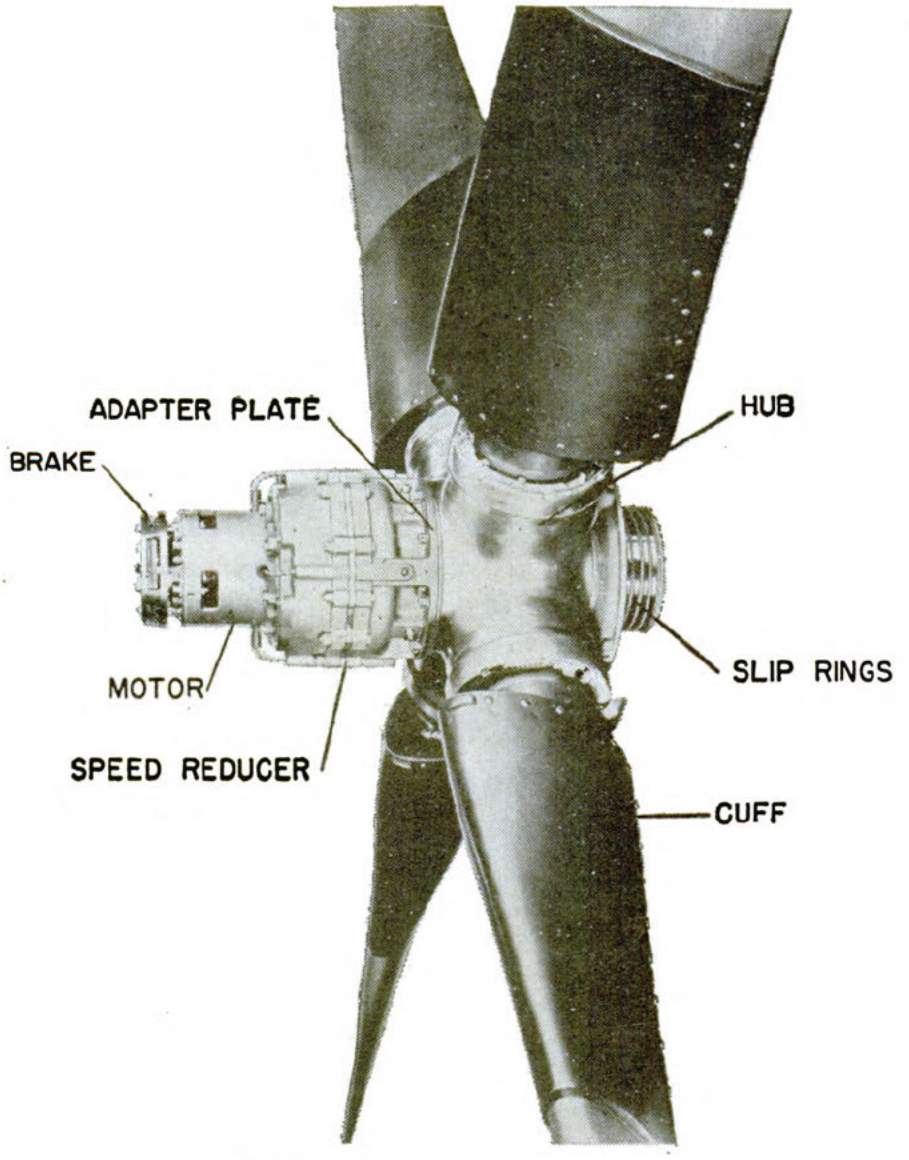

Figure 61.—4-way propeller assembly.

The inner brake assembly consists of an externally splined brake facing an internally splined brake plate attached to the rear outer brake plate, a large coil spring, and a solenoid.

Glance at figure 62 to see just what the brake assembly looks like.

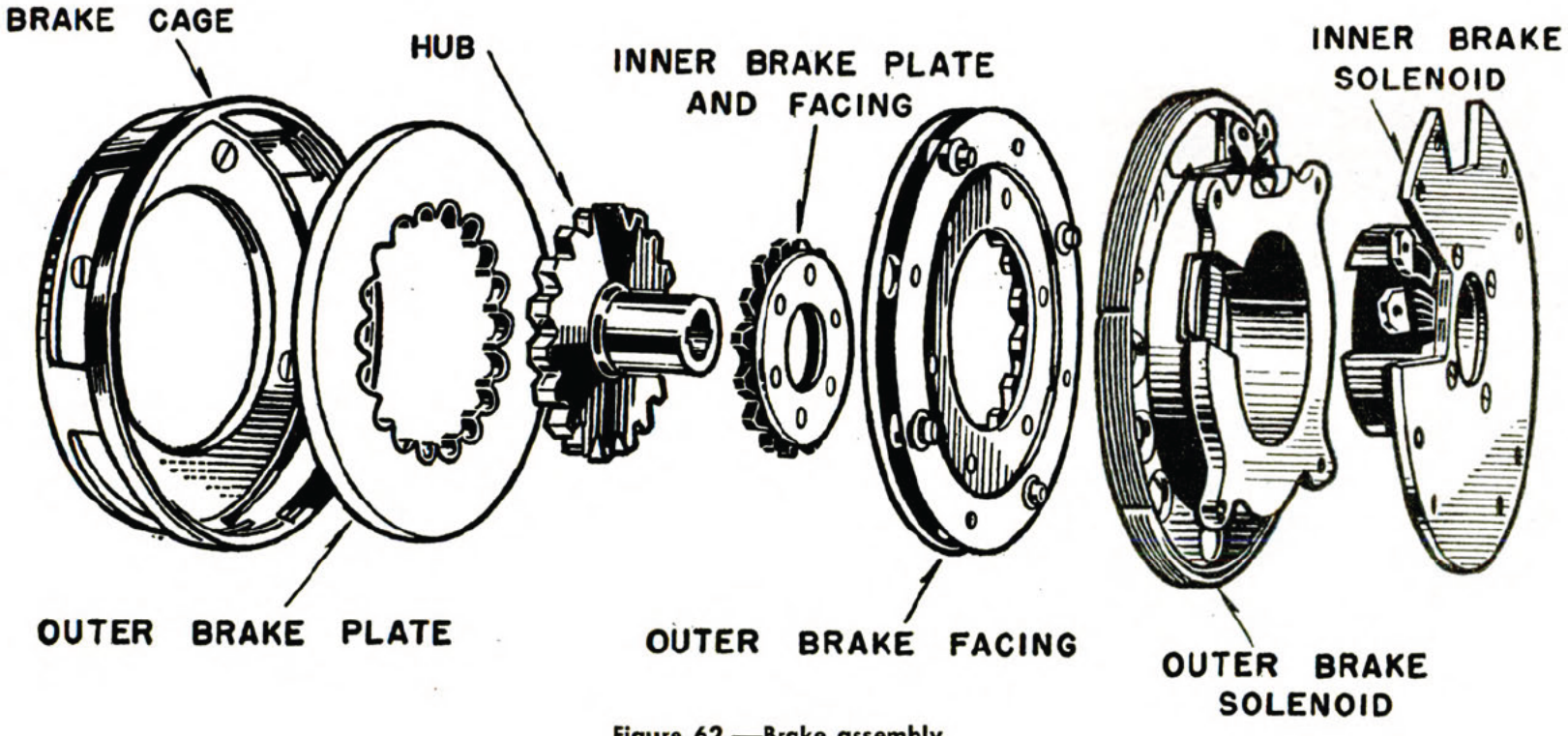

Figure 62.—Brake assembly.

Next, you'll have to know about the DYNAMOTOR (fast feathering voltage booster) used with 4-way propellers. It is a single dynamotor unit placed in the propeller circuit to increase the normal voltage supply for rapid feathering operation. Only one voltage booster dynamotor unit is required for every two propellers.

The voltage booster dynamotor consists of an armature supported by ball bearings located at each end of the input and output heads. The heads which contain the brush rigging are doweled to the yoke and held in place by four through bolts.

The input head also contains a solenoid switch, terminal posts, and two conduit outlets. Brushes and commutators are accessible through a removable inspection strap clamped to each head. The field coils are shunt-connected to insure a constant voltage output when the unit is in operation, and are assembled in the yoke by means of four pole shoes.

Four-way propellers are shipped with propeller shaft nut, front cone, hub puller snap ring, grease seal, spreader, and power unit removed. To save space, the propeller is usually shipped with three blades removed from the hub, and must be reassembled.

REMEMBER, when you're installing this type of propeller, that if the slip ring housing is of the bonding type, you must remove the bonding brushes.

Here's how you'll measure the location of the slip ring brush contact on the slip rings—

Install the brush assembly in the slip ring housing and measure the distance between the face of the propeller shaft thrust nut and the center of the forward brush.

Measure the distance between the center of the front slip ring and the base of the rear hub cone, while the cone is held firmly in the hub.

If the difference between the two measurements exceeds 0.40 inch, you should use a shim.

More slip ring brushes are damaged by forgetting to remove the brush assemblies from the slip ring housing before installing (or removing) propellers, than from any other cause. Always keep brush assemblies out of the slip ring housing of unmounted propellers except when measuring for brush location as described.

Install the hub rear cone on the propeller shaft. Be sure the cone is clean and dry!

Remember this when you're installing the POWER UNIT. Lubricate the hub with grease—Specification AN–G–4, Grade AA.

You can do that by using a pressure gun on each of the three grease lubricators until the grease flows from the relief fitting. Be sure to place the relief fitting uppermost. If there is no relief fitting, remove the top grease fitting.

Check the oil level. With the airplane leveled, rotate the propeller until the filler plug is approximately 12 degrees below horizontal. Remove the plug. If there is no oil at the plug opening, add speed reducer oil AAF Specification 3600, until the oil is at this point. Then, install the plug.

The blades of the four-way propeller are held at the selected angle by the brake assembly.

The outer brake is released by the solenoid connected in series with both the increase and decrease rpm windings of the motor and is applied by spring forces acting against the rear outer brake plates when the motor is not operating. The inner brake is released by a solenoid connected in series with the decrease rpm winding of the motor and is applied by spring forces acting against the

inner brake plate. Therefore, the inner brake drags during increase rpm operation. This helps to counteract the centrifugal twist which tends to move the blades to a low pitch position and makes the rate of pitch change equal for increased and decreased rpm.

The cut-out (limit) switches at the hub end of the speed reducer limit the high and low blade angles to the flight range, and also stop the blade angle change at the feather position. The high and low angle cut-out switches are effective while operating in automatic constant speed. The feather and low angle cut-out switches are effective in selective fixed pitch.

As you know by now, the term "feathering" designates the operation of rotating the propeller blades beyond the highest angle required in normal flying to an edge-to-the-wind position.

Full feathering is used when mechanical trouble develops in one of the engines, thus preventing the propeller blades from "windmilling" in flight and causing further damage to the engine.

Fast feathering under boosted voltage is accomplished by means of the feather switch in the cockpit. The feather switch breaks the normal propeller circuit and at the same time completes the feather circuit, causing the propeller blade angle to increase to the feather position.

Feathering also can be accomplished at the normal rate of pitch change by holding the selector switch in the DECREASE RPM position until the blades reach the feather position.

You're going to have to know the way to check inner brake clearance. As far as adjustment goes, you first remove the nut and duplex brake locking bolt.

Next, remove the duplex brake cages, using a wrench and a light hammer. Remove the splined

disk brake facing, then the cotter key and nut from the brake shaft. Use a holder to prevent the hub from turning.

Use a puller and remove the brake hub from the shaft. Then, remove the duplex brake cover facing assembly and the brake shaft key.

Add or remove shims as necessary, between the spacers around the shaft.

Install the inner facing assembly, brake hub and shaft key. Then, install the washer and shaft nut and tighten the nut.

Check the inner brake clearance. If the clearance is as specified, cotter-key the shaft nut.

Install the outer brake facing and brake cage. Use a wrench and light hammer to tighten the brake cage.

Be sure you tighten the cage until the fine segment shoulders on the cage are in contact with the shoulder on the outer coil housing. Use a 0.001-inch feeler gage to make certain that the shoulders are in contact.

Further, tighten the cage a minimum of 9 degrees or approximately $^7/_{16}$ inch as measured at the circumference of the threads.

Check for insertion of locking bolt. If necessary, tighten until a cage locking bolt hole lines up.

Under no circumstance should the cage be backed off to line up the locking bolt holes or to adjust the brake gap.

Lock the cage with bolt and nut.

Check the outer brake clearance by inserting a feeler gage between the rear outer brake plate and the inner ring of the outer solenoid housing.

The outer brake clearance should be 0.010 to 0.020 inch.

Now, if you are going to adjust the outer brake clearance—

Remove the brake cage and the four nuts and screws from the brake cage. Add or remove shims, as required, between the brake cage and the forward brake plate.

Reinstall, tighten and lock the cage. Check the motor. Inspect the general condition of the motor terminals and leads and tightness of brush rigging.

If you find worn or damaged parts, repair the motor in an overhaul shop.

THE ELECTRIC-AUTOMATIC SYNCHRONIZER

The automatic synchronizer is a propeller control system used to synchronize the engines of a multi-engined airplane at any desired speed. This control system consists of several major parts. The MASTER UNIT consists of a manually adjustable, constant speed d-c motor operated from the electrical system of the airplane. Mounted on, and partially driven by the MASTER MOTOR are individual CONTRACTOR UNITS, one of which is required for each propeller. Each engine is equipped with a small three-phase ALTERNATOR mounted on the governor drive pad. A master unit tachometer, and necessary control switches complete the synchronizer control system. The conventional governor is not used with this system.

The value of the automatic synchronizer lies in the elimination of "beat", or harmonic vibration, which is the source of annoyance during flight, if not a dangerous hazard due to failure of parts caused by metal fatigue. It has been found that even when engines are only slightly off speed, for instance, 20 rpm between engines, a distinct beat will occur every three seconds. It is difficult to read an engine tachometer to within 20 rpm during flight and therefore ad-

justing engine speeds manually until beat has disappeared is pretty much guesswork. This is particularly true in a four-engine airplane and synchronization has often been a long and tedious process. Moreover, even after engines are once synchronized, rough air or variations in operating

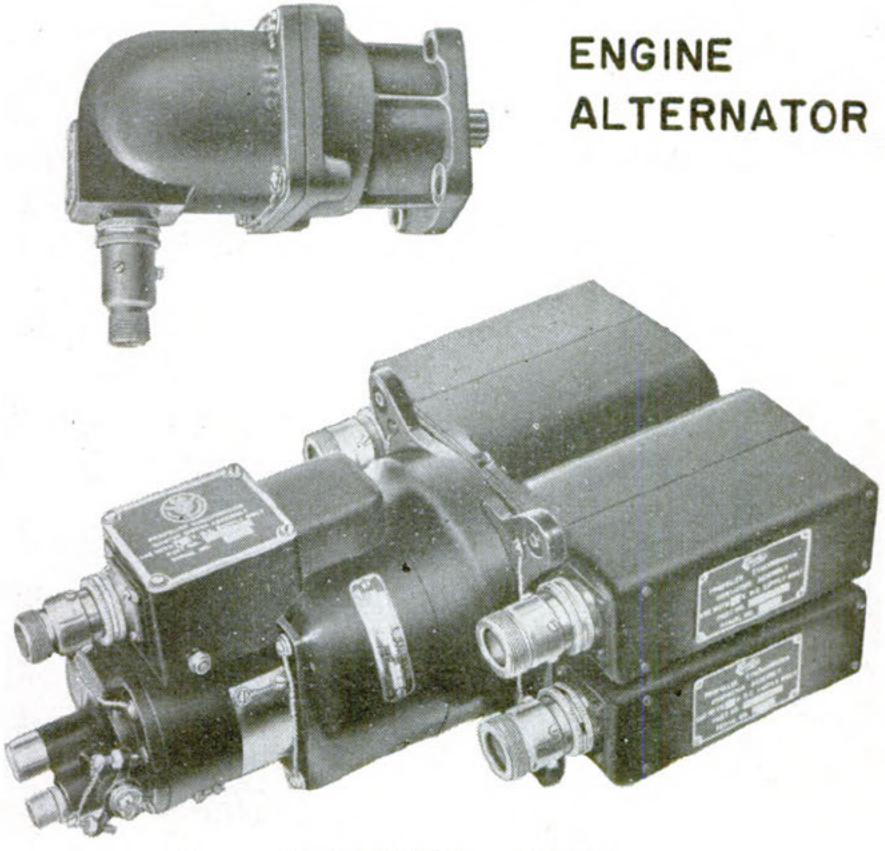

Figure 63.—Electric automatic propeller synchronizer.

conditions may throw them out of phase and the process of synchronization must be repeated all over again.

With the electric synchronizer, these difficulties are eliminated. All that need be done on the part of the pilot is to flip the master motor switch ON, throw the selector switches of each engine into "Automatic," and select the rpm desired by turning a single control knob until the required speed

is registered on a master tachometer. Immediately, blade angles of the individual propellers will change to bring the engines to the selected rpm, and keep them there regardless of attitude of the airplane or throttle settings, within the range of the propellers. If a change in rpm is desired, the control knob is turned until the new desired rpm is read on the master tachometer. Readjustment of throttles is then necessary to maintain required manifold pressures but not rpm, since that will be controlled by the synchronizer.

If so desired, one or any number of engines may be cut off synchronization by merely throwing the selector switch for those particular engines off. If it is necessary to feather a propeller the pilot need only throw the proper switch starting the feathering operation. Automatically, that engine will be cut from the synchronizer.

The principle of operation of the electric synchronizer depends on the balancing of the speed of each engine against that of an adjustable constant speed unit, THE MASTER MOTOR. The essential mechanism in this balancing is the CONTACTOR.

Three phase alternating current, supplied by the engine-driven ALTERNATOR is impressed across a three phase armature in the CONTACTOR. This current creates a magnetic field which rotates around the armature at the same speed as that of the engine driven ALTERNATOR. However, the units must be wired so that the rotating magnetic field will always turn in a counterclockwise direction regardless of the direction of rotation of the ALTERNATOR. Therefore, right- and left-hand governor drives will necessarily call for different electrical connections.

This armature, which is really the stator of a small hysteresis motor, located in the contactor,

is geared to and rotated by the MASTER MOTOR in a clockwise direction at the speed selected by the pilot.

Since these two rotations are opposite in direction to each other, they tend to cancel each other out so far as actual speed of rotation is concerned. It is as though you substituted for the stator armature a merry-go-round constantly rotated in a clockwise direction at a selected speed; and for the magnetic field, substituted a man walking around the outer edge of the merry-go-round in the opposite direction. With that picture in mind, imagine the man and the merry-go-round traveling at the same rate of speed. In relation to the ground the man will be stationary. However, if the man either slows down or speeds up, he will either be losing ground or gaining it, despite the fact that he is constantly walking in a counterclockwise direction.

Now, examine the condition set up in the stator. The magnetic field set up by the ALTERNATOR will be the constant one of the two speeds, while ALTERNATOR AND MASTER MOTOR are equal. That is on onspeed condition. If the ALTERNATOR speed is increased due to flight conditions, the counterclockwise rotation of the magnetic field in the stator will overbalance the mechanical rotation imposed by the MASTER MOTOR and the field will then rotate counterclockwise at the difference in the two speeds. That is an overspeed condition.

If an underspeed condition exists, the same will occur except that the field will be carried backward, i. e., in a counterclockwise direction.

These conditions are translated into mechanical rotation by means of a bell-shaped rotor set over the stator. This bell, magnetized and therefore gripped by the magnetic field, will remain stationary in onspeed, turn clockwise in underspeed,

and counterclockwise in overspeed. Always, when it does rotate, it spins at a rate of speed determined by the amount of offspeed.

The direction of rotation and its speed determines, through a directional contact mechanism mounted on the shaft of the rotor, the need for increasing or decreasing the rpm at the engine. Through a system of relays, pulses of current are sent to the particular propeller needing correction and blade angles change so as to control the engine.

Actually, the synchronizer has much more detail than has been described thus far. By having the directional contact mechanism mounted on a small commutator with live and dead segments, and by having the current carry through brushes mounted on this commutator, the flow of current to the relays is broken into pulsations. By careful timing of the propeller relays plus control of those relays by an interrupter relay, the pulses are timed so as to have the pitch-change motor operate in running periods each lasting approximately $1/10$ of a second. If the amount of offspeed is small there will be a few pulsations in a given period of time. But if the offspeed is large there will be many pulsations in the same period of time. This is the proportional feature.

Also incorporated in the unit is the feature permitting solid correction if the amount of offspeed is as great as 58 to 64 rpm. This is accomplished by the assistance of a condenser and by timing the interrupter relay so that it will no longer be effective at these higher rpm.

The installation facilitates maintenance and also avoids complications arising from operating difficulties by having only the ALTERNATORS mounted on the engines. The MASTER MOTOR and CONTACTORS are located in the pilot's compartment and are

readily accessible if service or changes are required. Furthermore, since the more delicate parts which actually control pitch change are located in the pilot's compartment, vibration is kept to a minimum. This is a factor often causing trouble in delicate mechanisms.

A protective feature is also included in the form of a relay mounted in the master motor. As long as everything functions properly in that unit, the points of the relay remain closed. But if anything should happen to cause the master motor to run too slowly or too fast, the points will open automatically, disconnecting the complete synchronizer from the propellers. This is important because of the master motor being the central unit against which the speeds of all the engines are matched. Any variation in the speed of that unit is reflected by changes in engine rpm. If a fault such as described should occur, all propellers will be held in fixed pitch from the moment the trouble occurs. Thereafter, the pilot, having been warned by an indicating light going out, will make changes as needed by means of direct control selector switches. The individual engine tachometers will then be used as indicators.

However, the master motor, being the amplidyne type with a built-in governor, is constructed so as to practically cancel out any tendency to run off set speed. Actually the motor, when operating, is continually being corrected in its rpm by the governor contacts which switch electricity through control field windings. These corrections occur 400 times per second.

REMOVAL

By now, you should be pretty familiar with the steps in the removal of a propeller from the crankshaft.

To remove an electric propeller (an aluminum-alloy blade type will be used as an example), you first release the two latches that hold the slip ring brush assembly to the housing. Then remove the brush assembly. The removal of this assembly is necessary because damage will occur if you try to remove the propeller with the brushes in position. Next, remove the anti-icing slinger supply tube. Remove the locking assembly and unscrew the propeller shaft nut. Once this is done, carefully lift the propeller from the shaft.

To remove the blades from the hub, place the hub assembly, slip rings down, on a spindle. Remove the locks from the blade nuts, marking the location of them on the hub and nut with paint. Unscrew the blade-retaining nuts from their sockets. Take each blade out of its socket and place it on a clean assembly table with the bearings overhanging the edge. Remove the shims from the bottom of the hub sockets, keeping each shim with its respective blade assembly.

When you're ready to remove the governor control from the propeller, you first disconnect the control rod or cables from the governor. Next, disconnect the conduit and wire connections by loosening the conduit nut and then unscrewing the electrical connector. Remove the lockwire and nuts which attach the governor to the engine drive pad studs. Remove the governor and gasket. Cover the engine drive pad to prevent entrance of dirt.

DISASSEMBLY

Suppose you start by disassembling the POWER GEAR. Before you take this mechanism from the power unit, mark or note the spline space on the power gear mating with the mark on the power unit spline drive. This indicates the low angle

setting of the propeller. To loosen the power gear assembly, remove the three countersunk attaching screws and the snap ring from the splined end of the low speed bell gear. Remove the gasket and the insulator-line steel bushings from the rear of the speed reducer housing. Press the power gear, shims and grease seal from the adapter plate, being careful not to damage the grease seal or the shims, and remove the snap ring and bearing.

Next in the line of disassembly comes the MAGNETIC BRAKE AND MOTOR. Here, you first remove the motor cover. Disconnect the thrust plate assembly lock and, with a thrust plate wrench, unscrew the thrust plate assembly. Remove the splined floating brake disk. Remove the cotter key from the motor shaft nut and, while holding the brake hub with a hub holder, remove the shaft nut.

You can remove the hub with a hub puller. Remove the hub locating key from the shaft. Take out the brake shims and spacers. Straighten the three tab washers and remove the brake plate assembly attaching nuts. Remove the brake plate assembly and the three brake springs.

Next, remove the three brake spacer nuts from the end shield locating block studs. Disconnect the solenoid terminals by removing the terminal retaining nuts, and remove the end shield (but replace the terminal nuts to avoid misplacing them).

You can disassemble the thrust plate assembly by removing the three elastic stop nuts, and then removing the front brake plate and shims from the thrust plate.

Remove the motor retaining ring nut from the front speed reducer housing, and lift off the motor. Be sure, however, to prevent any side loads on the armature which might bend the shaft

or crack the sleeve extending through the speed reducer. Press the armature from the motor housing, and take the bearings from the rear of the motor housing and from the end shield or motor shaft. Finally, take out the brushes from the brush holder.

And now to disassemble the SPEED REDUCER. You first remove the oil filler plug from the speed reducer housing and draw the oil. Next, remove the nuts and bolts which hold the front and rear housings together. Using a hammer, and a brass or wooden drift, tap the fixed ring gear from the rear housing. The ring gear, the front housing, and the gear assembly will then separate from the rear housing. Remove the gear assembly from the front housing. Disassemble it by removing the nut from the end of the shaft and removing gears, spiders, bearings and spacers. Remove the gears from the high and low speed spiders. You need only remove the front oil seal if you can plainly see that it is defective. Remove the fixed gear snap ring from the front housing and carefully work out the fixed ring gear.

Rotate the low speed bell gear in the rear housing until the cut-out cam and mechanical stop screws are visible through the breather holes. Insert a proper-size screwdriver and remove the screws. The screws holding the segment turn to the right when being removed, and fall into the bell-gear splined hub. Remove the cam-attaching screws, and then remove the cam by making use of two $^{10}/_{32}$ screws 2 inches long as jack screws in the tapped holes provided in the cam. Push the bell gear out of the rear housing and remove the bearing, oil seal and also the felt grease seal.

And now the LIMIT SWITCHES—

Unscrew the terminal screws from the rear speed reducer housing and remove the motor leads.

Remove the terminal studs, clevis pins and switch arms. The limit switch assemblies are taken from the rear housing and need be disassembled no further.

That brings you to the BLADES. For dural assemblies, you'll save lots of trouble later on if now you keep the individual parts of each blade assembly together. Step No. 1 is to remove the clamp. If it is not a hinged clamp, unscrew it from the blade gear sleeve and slide it out on the blade. Slide the retaining nut over the blade shank. On those assemblies making use of blade seals, pour kerosene between the gear halves so that the kerosene will dissolve the cement used to seal the blade and nut seals. When the cement is sufficiently soft, carefully tap the bearings off the gear. Use brass or aluminum blocks to cushion the blows when tapping the bearings. Remove the gear, spacer bearings blade nut and seal, clamp, and blade seal from the blade.

Next is the HUB. You'll find it necessary to disassemble the hub only when the slip rings need replacing. It is not necessary to remove the slip rings in order to inspect the hub. Remove the screws holding the slip ring assembly to the hub, and take off the slip ring assembly with its connector rods from the hub. Make certain the rods aren't damaged! Unscrew the connector rods from the slip ring assembly and remove their insulating tubes. On those assemblies making use of connector-rod seals, note the position of the rods and gaskets so that they can be reassembled properly. Mark the slip rings so they can be reassembled in the proper order and position, then slide them off the insulating sleeve.

To disassemble the BRUSH HOLDER, remove the warning plate, and disconnect the wires from the brush terminals. Unscrew the four screws which

secure the brush holder to the mounting bushings in the brush cap, and remove the holder. Remove the two screws which hold each brush terminal block in place. (On the molded-type holder it is only necessary to remove the cover.) Remove the brushes from the holder; unscrew the four attaching screws and remove the electrical connector socket.

The disassembly of the GOVERNOR CONTROL is a process in itself. Suppose you start with the UPPER CASE of the governor. Remove lockwire, washers and four castle nuts which secure the upper case. Remove upper case and gasket. Remove flyweight spring from case. Remove control lever from control shaft by removing the castle nut. Remove the take-off stop arm. Turning the control shaft will allow the governor-spring adjusting rack to be removed through the guide on the under side of the cover.

As a means of reindexing the rack and gear to the same take-off setting, measure the distance from the lower end of the rack to the end of the guide while the take-off stop arm on the shaft rests securely against the stop on the cover. Upon reassembly, engage rack with pinion on control shaft to obtain this same measurement.

Finally, remove control shaft retaining nut and withdraw shaft.

To disassemble the OIL PRESSURE PUMP, remove two countersunk screws on bottom of adapter plate; then remove base plate and gasket. Remove idler gear. Remove snap ring from its position on spindle below drive gear. Slide drive gear off spindle and rotate spindle until drive gear pin is pointing toward idler gear well, and remove pin.

To disassemble the FLYWEIGHT SPINDLE, remove spindle from case. On earlier types not employ-

ing the oil pressure pump, remove snap ring from drive end of spindle and withdraw spindle from case. To remove scavenger pump idler gear from the flyweight chamber, rotate by hand in the direction of governor rotation indicated on plate attached to case. This is necessary because a worm is cut on the end of this gear shaft. Prying with tools may damage this worm or its mating teeth on the cam gear. Insert a soft metal or wooden rod into the lower end of the hollow spindle and push out the valve body.

On the high-pressure governor, remove the shim from the bearing cup. Remove the retaining nut and bearing from valve body. Remove lockwire, four screws and washers which secure the aluminum shell to the top of spindle. Remove shell. Remove four small pins from shell seating surface on top of spindle by inserting a piece of fine wire in the holes in the pins. Push out two flyweight pivot pins and remove flyweight assembly from spindle. Disassemble flyweights and valve-bearing seat from linkage by removing pivot pin and wire locks.

To disassemble the CONTACT MECHANISM, remove lockwire, washers and screws which attach cover to switch compartment. Remove cover and gasket. Cut lockwire and remove center contact guide stud. Remove cotter pin and nut which holds the oscillating contact assembly together. Remove washers, insulating washers, insulating spacers, wire terminals, contacts, and laminated shim from cam follower shaft. Remove the key which locates insulating spacers on the shaft.

Remove nut and tab washer from wire terminal on center contact assembly. The center contact assembly, base plate, and piston may now be removed from the governor for further disassembly.

Remove lock-pin and barrel nut from upper end of the center contact assembly. This may readily be accomplished by pushing the piston into its cylinder and pressing the center contact towards the piston at the same time. Remove center contact assembly, base plate, gasket, cylinder, and spring from the piston shaft.

To disassemble the CAM FOLLOWER AND CAM, remove the lock-pin which secures the cam follower bushing in the case by using a No. 4–40 machine screw as a puller. Remove cam follower assembly from case and disassemble it. Remove lockwire, four screws and washers which secure cam shaft bearing plate to front side of case. Remove plate and gasket and withdraw cam shaft. The cam is pinned to the shaft and need not be removed.

Now, to disassemble the PRESSURE SAFETY SWITCH, remove large plug (having screwdriver slot) from front side of case. The early-type governors have this plug at the LOWER end of case. After removing this plug, the contact piston and spring may be removed. Remove safety switch contact assembly by sliding the connecting wires through the slot provided in the case. Remove spring and contact piston. Before removing the contact assembly, it will be necessary to disconnect the electrical lead from the connector socket. The safety switch contact assembly in the early proportional governor is pressed into the lower end of the case and may be removed by preheating the case in the vicinity of the switch with live steam or a hot air blower.

To disassemble the ELECTRICAL CONNECTOR, remove the four screws which secure the connector socket to the governor case. The socket may then be disassembled into its component parts.

To disassemble the RELIEF VALVE, remove safety wire. Remove hexagonal plug and gasket, and locking screw and gasket from side of case. Remove relief valve spring and steel sleeve, and then take the piston from the steel sleeve.

INSPECTION AND REPAIR

Inspection and repair are two vital supports upon which propeller efficiency is built. At specified periodic inspections, the electric propeller must be checked as follows:

Set the throttle to give an engine rpm within operating range of propeller governor, and move the propeller switch to the fixed pitch position. Hold the propeller switch in the "increased" rpm position. Note the increase in engine rpm. When no further changes are indicated on the tachometer, the propeller is in full low-pitch position. Repeat the procedure, holding the propeller switch in the "decreased" position. This produces a decrease in engine rpm. When no further change is indicated on the tachometer, the propeller is in high-pitch position. During the checks just mentioned, DO NOT move the THROTTLE.

Now, move the propeller switch to the "automatic" position. Adjust rpm selector or control to give maximum rpm. Note the increase in engine rpm, and when no further increase is indicated by the tachometer, the governor is functioning and the propeller is in low-pitch position. Reverse this process to give minimum engine rpm, and when no further change is indicated by the tachometer, the propeller is in full high-pitch position. Return the propeller to low-pitch position for take-off.

The cockpit control, switches, relay and governor are inspected for security of mounting.

Brackets are inspected for cracks and other damage, for loose or damaged screws, bolts and pins, and for freedom of movement. Any damaged part must be replaced with a serviceable one before flight.

Remove the brush holder cover plate by taking out the screws, and inspect for evidence of carbon dust, oil, dirt, etc., particularly at the bottom of the housing. Remove such substances when found. Remove brush holder cap by loosening flexible conduit joint and removing wing nuts. Check brushes for excessive wear and accumulated carbon dust, oil, and dirt. Clean thoroughly by using compressed air and some noninflammable cleaning fluid. Check brushes to make certain they are working freely and make good contact.

Inspect relay for broken terminals, free action of the arm, and smoothness of contact points. The middle contact point should rest squarely against the fixed ones when in either of the two contact positions. In case of a failure to function, the relay is removed from the box by taking out the screws. If necessary, contact points should be replaced. Remember that the whole surface of the points make contact in operation. Remove relay box cover and seal, and check for accumulated carbon, oil, dirt, etc.—particularly at bottom of box and behind bakelite panel. A flashlight will probably be necessary to determine whether there is any inflammable material near the contacts.

Here's how you go about checking retaining nut for looseness. Remove motor and power unit cover. Remove power unit, which is secured to the hub by bolts. Remove locking device. Insert a 3- to 3½-foot bar into retaining nut. Apply a weight of 250 to 300 pounds on end of bar. The bar is applied steadily; avoid jerking it. Then

install locking device. Remove the mechanical stops from the power unit as well as the adapter plate and power gear. Operate the motor towards low pitch until the cam just starts cutting out the low pitch limit switch. If the propeller was running at low pitch before removing the power unit, this is not necessary. Now replace the mechanical stops and index the power gear to the proper low pitch angle and install. Turn the blades, and using either field settings or a universal protractor, set them to low blade angle. Install power unit and secure it to the hub with bolts. Safety all bolts with wire. Do not disturb setting of blades when installing power unit. Install power unit and motor covers and safety all screws with wire.

The brush holder is removed by disconnecting flexible conduit, removing wing nuts or clamps and disconnecting wire terminals under cover plate. The brush holder assembly is then thoroughly washed with a cleaning fluid, preferably noninflammable. Dry with compressed air. Replace all worn brushes or other damaged parts. The slip rings and the inside of brush housing must be thoroughly cleaned with a cleaning fluid, and dried with compressed air.

In checking the governor, remove the inspection plate and examine the contact points for pitting and proper clearance. When the engine is not running, the middle contact will be resting against the increase rpm point and the gap should be as follows—

GOVERNOR	GAP
100006	0.155 to 0.165″
100008 D, E, F, G	0.126 to 0.129″
(Allowable to 0.136)	
100008 H	0.120 to 0.122″

When checking the magnetic brake, the nose cap of the power unit must be removed. Determine if the brake disk is engaged against the lining of the brake plate when the current is off, and upon application of the current, if the disengagement is effected immediately. Glazing of the brake lining can be removed with a coarse file. Any looseness of the brake plate with respect to the motor shaft should be noted, and the lining checked for excess wear. Check the gap between the brake lining on brake plate and the clutch facing on brake disk for proper clearance. Use a gage to make the check. Make sure the gage is inserted between the brake lining and the clutch facing in the direction of rotation of the motor shaft.

Remove the relay box cover and seal, and disconnect the relay. Then remove it from the box so that contact points can be inspected. On some relays, conventional material is used for the contact points. If these points show excessive pitting or piling up of contact material, dress them down with a fine-cut file, such as an ignition contact-point file. If an excessive amount of metal is removed, replace the relay.

On other relays, a special Elkonite point material is used. Discoloration and fine pitting of these points are normal and will not increase the resistance or their tendency to stick in operation. The Elkonite points should not be filed or stoned, since this only shortens the life of the points.

Both types of relay points are checked for proper alinement of the contact surfaces. If there is sufficient wear of the center switch contact arm bearing and centering spring to allow the contacts to strike when jarred without electrical operation, the relay must be replaced.

Thoroughly clean the relay box and relay, since any inflammable substance may be ignited in operation by arcing of relay points. Install the relay panel in box, reconnect wires, seal conduits, attach cover, and safety.

In this particular type of propeller, which depends on the electrical system for power to change the blade angle, most of the maintenance problems are electrical. Checking all terminals, connections, brushes, etc., is the first step in locating the source of trouble. If this fails, the trouble may be in the power unit or propeller, which would require the services of trained propeller mechanics to locate and correct the condition.

EXCEPTIONS—

Occasionally the flexible shaft from the rpm control to the governor is not properly seated or in mesh. This will be noticed during operation in the "automatic" position. Any change of the rpm control will have no effect on the engine rpm. This is corrected by removing the control and seating it properly—making sure the control is in mesh at both ends.

If at any time the propeller will not change angle in either the "manual" or "automatic" position, and all wiring has been checked and found correct, then check magnetic brake for clearance.

ASSEMBLY

Begin assembly with the HUB. Your first step will be to assemble the slip rings and insulator rings on the insulator tube. Then install the labyrinth seal on the front end of the slip-ring mounting sleeve, and coat the joint with copaltite or some similar sealing compound. Place the six insulator bushings into the holes provided for the

attaching screws, and insert the LONG insulator bushings.

On those assemblies making use of connector rod seals, install the rods and seals in the order noted in the disassembly procedure. Coat the threads of the connector rods with litharge and screw each into its proper slip ring. After coating both sides of the slinger ring or spacer with a sealing compound, mount it on the slip-ring assembly and press the assembly in place on the hub. Tighten and lockwire the six attaching screws. Check the contact points to be sure they are either flush with, or not more than 0.005 inch below, front face of the hub. To adjust, add or remove shims directly under the head of the removable contact. On final setting, coat the threads of contact with litharge. Then test for trueness and balance.

Now proceed to the BLADES. (This applies to DURAL ASSEMBLIES.) First of all, tape or otherwise wrap some kind of protective material around the blades to prevent scratches or any other kind of damage. Put the blade on a clean assembly bench with the shank overhanging the end. Slip the blade clamp, the blade nut (with its grease seal and spring), the blade bearings, and the spacer (if used) well up on the shank of the blade in the order named. Be sure the outer beveled edge of the spacer is toward the bearing stack.

The component bearings of a stack must be kept together at all times. Individual bearings of stacks, copper plated on the outer diameter, may be identified by means of a serial number etched on the shoulder of the outer race of each bearing. This serial number is the same for all of the bearings in the stack. Each bearing is successively numbered, and the bearings should be

installed so that the numbers increase from one to the highest number, with the No. 1 bearing nearest the tip. The serial number and individual bearing number of those stacks which are not copper-plated are etched on the outer diameter of each bearing. These stacks are also marked with a "V" which should point toward the tip of the blade when the bearings are installed.

Apply a light film of oil to the outside surface of the blade nut seal. Also apply a light film of oil to the blade shank, and install the blade-shank seal so that the split will be 90° from the blade-gear parting surfaces. Apply a thin film of Bostik No. 292 cement (approximately one inch square) to the shank seal at the two points where the ears on the nut seal contact it. If the ears are on the shank seal, apply the cement to the ears and surrounding area.

Place the halves of the blade gear in position on the shank. These halves are marked with a serial number and only the halves bearing the same number shall be assembled as a whole. The chafing strip used on the No. 2.5 shank blade assemblies must be held in place while the gear is installed. The strip must be installed so that the split is approximately 90° away from the blade gear parting surfaces, and so that the outer edge of the strip is within $\frac{1}{32}$ of an inch of the outboard edge of the gear.

Slip the spacer (if used) and bearings on the machined bearing surface of the blade gear. Apply a small quantity of Bostik cement on the gear at the points where the ears of the blade nut seal contact it. Locate the blade nut seal and the blade nut next to the bearing stack.

Place the clamp in position on the blade gear so that the head of the bolt faces the leading edge of the blade and partially tighten the nut.

When you're ready to place the blades in the hub, put the hub (with the slip rings down) on a propeller table or some other suitable arrangement or spindles. Carefully inspect the hub barrel and blade-nut threads for imperfections, wire edges, and for assurance of absolute cleanliness. Coat the inside of the blade sockets with engine lubricating oil, and the threads on the blade nuts and in the barrels with anti-seize compound (70 percent white lead and 30 percent lubricating or castor oil by volume).

Manufacturing tolerances on the gear used with a No. 2 shank blade are such that blade-gear backlash shims of various thicknesses must be used to maintain the correct relation of the blade gear to the power gear. A number, stamped on the outer circumference of the blade gear, is used in the table below to determine the correct shim to use with that particular gear.

FOR A NO. 2 SHANK BLADE: BLADE GEAR NUMBERS	SHIM NUMBERS	ACTUAL SHIM THICKNESS
0.000	−0	0.062
.002	−2	.059
.004	−4	.056
.006	−6	.053

For the No. 2.5 and No. 3 shank blades, shims of a single thickness are used, since no adjustment is required. Place the correct blade gear backlash shim, as determined above, in the bottom of each blade socket. The chamfered side of the shim must be toward the center of the hub.

Insert each blade assembly into its proper socket. Usually the blade with the lowest manufacturing number goes into socket number 1, the next higher number goes into socket number 2, the highest number goes into socket number 3.

Screw each blade nut into the hub until one-half of the threads are engaged. Slide each

blade assembly in and out several times and finally pull it out sharply against the blade nut. Insert an aluminum wedge between the end of the blade and the hub boss in the bottom of the blade socket. Tighten the blade nut snugly. Loosen the blade clamp and further tighten the blade nut. Tighten the blade clamp, back the blade nut off slightly, and remove the wedge while holding the blade out by hand. The nut must be finally tightened by sharply striking the wrench with a 10-pound brass hammer until the two corresponding slots, marked at disassembly, line up. When properly assembled, it will barely be possible to rotate the blades by hand. However, a check should be made with a wooden blade wrench to make sure the blades will rotate.

To assemble the SPEED REDUCER, place oil seal and felt grease seal in the rear housing. Place the mechanical stop segment in the breather section of the rear housing. Press the low-speed, bell-gear bearing onto the shoulder of the bell gear, so that the thrust face of the outer race is away from the bell gear. Press bell gear into place in the rear housing, being careful to avoid damage to the oil seal. A slightly tapered sheet-steel sleeve fitting over the splines may be used to guide the spline shaft through the oil seal.

From the inside of the bell gear, insert the two screws which hold the stop segment in place. Tighten the two screws by inserting a screwdriver through a breather hole in the housing. These screws should be staked in place. Install cutout cam by pressing it into place and installing the screws and lockwashers through the breather holes in the housing. The smaller attaching lug, or cam, fits into the recess in the mechanical stop segment. If removed, press the oil seal in from housing, and stake in place. Install high-speed

fixed ring gear, with its keys and retaining snap ring, in front housing, making certain that the snap ring is in such a position that keys cannot work out. Assemble both the high and low speed spider assemblies. Assemble the internal gearing having the index marks on the planet gears lined up. Make sure that the nut on the end of the shaft is tight and cottered, so as not to interfere with the bearing or housing.

Using a new gasket (shellac unnecessary), install the low speed fixed ring gear in place on the rear speed reducer housing. While turning the gear assembly, mesh it in place in the rear housing. If the gears have been properly indexed, they will mesh with the low-speed bell gear without difficulty. Insert a second gasket (shellac unnecessary) on the top of the fixed ring gear and install the front housing, being careful to guide the shaft through the front oil seal without damaging it.

Place the bolts which hold the front and rear housings together into position so that the head of each bolt faces the rear of the speed reducer. Install and tighten the nuts. While tightening, turn speed reducer with screwdriver. If the unit binds, it should be disassembled and checked for improper assembly.

Pour 1 pint of Curtiss Speed Reducer Oil No. 2 through the plug opening in the front housing, and secure the plug. Refer to latest Propeller Instruction Bulletin for other approved lubricants.

Coming up next are the MOTOR AND BRAKE.

Place electric motor brush assemblies in brush holder. Install shims in bearing cage at rear of motor housing and fit bearing in cage. Check for clearance between commutator and brush holder before armature is installed. This is accomplished by measuring distance from bearing outer

race to top of brush holder, and from commutator to armature shaft bearing shoulder. The latter dimension should be $1/64$ of an inch greater than the the first. If necessary, adjustment is made by adding or removing shims under bearing. Slip armature in motor housing. Install the three shield locating block assemblies. Install the armature bearing shims and bearing in the shield bearing cage. Install and secure cage on motor housing with the three brake-spacer nuts. If necessary, adjust the armature bearing shims to obtain 0.002 to 0.007 inch end play of the armature.

Install the motor assembly so that motor terminals seat properly on speed-reducer connecting sockets. Be certain the motor-housing keyway alines with key riveted to front of housing. There should be a clearance of from 0.010 to 0.015 inch between top of key and key way race. Check clearance by measuring keyway depth and height of key. File key if it is too high.

Coat motor retaining nut threads with thread lubricant and tighten in place with properly-fitting wrench. To tighten thoroughly, clamp speed reducer in vise. Using a 3-pound hammer, strike end of motor-nut wrench several solid blows to draw up nut until the lug and screw holes of motor cover line up with the slot in the nut and screw holes in motor housing respectively. Never back up nut to line up lug and screw holes.

Attach solenoid assembly leads to terminal posts in motor housing. Make sure that solenoid terminals lie flat on their posts, with no tendency to be forced either up or down when nuts are tight. Install the three springs and brake plate assembly, making sure the springs are properly seated on their locating studs. Install new tab washers, making sure that one tab of each washer

is bent over the diaphragm between the solenoid housing and the diaphragm. Install and tighten the three brake-plate assembly attaching nuts, and bend the remaining tabs over the nuts. Install spacer and shims on the armature shaft, placing the shims between the two spacers. Install hub locating key and hub on shaft. Install and tighten shaft nut.

Measure the hub clearance. This is the clearance between the hub and the rear brake plate when the brake is fully assembled. However, since this measurement is rather difficult to obtain when the brake is assembled, it may be taken at this stage of assembly by measuring the clearance between the inner ring of the end shield assembly housing and the brake plate, with a feeler gage. This clearance, which should be from 0.035 to 0.050 inch, may be adjusted by removing the hub and adding or removing shims under it. When the proper clearance is obtained, cotter the shaft nut.

Install brake disk and thrust plate assembly, and tighten thrust plate assembly. Using feeler gage, again measure clearance between inner ring of end assembly housing and brake plate. This clearance now indicates the brake gap. It should be from 0.010 to 0.020 inch, and may be adjusted in the following manner—

Remove thrust plate assembly. Remove three elastic nuts from bolts on thrust plate, and remove front brake plate. Add or remove shims under brake plate as necessary to obtain the proper clearance. Replace and secure the shims and brake plate. Install and tighten thrust plate assembly. Again check brake clearance.

When proper clearance is obtained, install and safety-wire the thrust-plate assembly lock. The thrust-plate assembly should always be screwed in

tight, and should never be backed off to aline lock or to adjust brake clearance.

Install motor cover. Motor cover must be tried with locking key in each slot in the ring nut, until one is found which allows screw holes in the motor cover to line up with threaded holes in the motor housing. Do not loosen motor retaining nut to aline these holes.

Next to be assembled are the LIMIT SWITCHES. Install limit switch assemblies, switch arm, and screw terminals in place. Make sure that the limit switch arms do not ride on cam lobes. Install gasket, and screw the adapter plate in place. Using a depth gage, determine the distance which the limit switch contacts extend through the adapater plate. The contacts must extend $\frac{1}{32}$ to $\frac{3}{32}$ of an inch from the face of the plate.

On those units employing fast-feathering boosters, a further check must be made in order to make certain that there is an adequate break in the electrical circuit under boosted voltage conditions. To accomplish this check, remove the adapter plate and operate the power unit until the feather-limit switch arm reaches the top of the cam lobe. Replace the adapter plate and measure to see how far the contact is below the face of the plate. On a 12-volt system, this distance must be 0.075 of an inch; on a 24-volt system, 0.125 of an inch. On those installations provided with reversing circuits, the reverse limit switch contact must retract the same distance as specified for boosted feathering.

Now, attach the motor leads to the limit switch terminals, using spring washers, under screw heads. Seal the motor terminal connectors in the rear housing with beeswax.

Now comes the POWER GEAR. Pack bearing with No. 2 Mobilgrease. Slip the power-gear lami-

nated shim on the shoulder of the power gear. Press bearing into adapter plate, and install the bearing snap ring. Place grease seal in the adapter plate; press power gear into the bearing, being careful not to damage the seal.

Now you can turn your attention to the assemby of the GOVERNOR CONTROL. First, the standard type governor and its PRESSURE SAFETY SWITCH will be considered. Insert pressure-switch piston with contact facing outward. To install those piston assemblies on which a seal is mounted, form a cylinder of cellophane in the pressure-switch compartment so that it extends into the inner piston-assembly compartment. Oil the seal and insert the piston assembly (seal first) into the governor, using the cylinder as a sleeve. When the seal is past the bevel, carefully remove the entire cylinder being careful not to leave any traces of cellophane in the compartment.

Place pressure spring and gasket over switch assembly, and insert into chamber. Care should be taken that the wires go THROUGH the slot provided, and that the spring is resting on the shoulder of the piston. Install retaining screw plug and tighten in case. Connect the wire from the pressure safety switch to the electrical connector.

The ELECTRICAL CONNECTOR is next on the assembly line. Assemble the three contact pins in the connector-socket assembly, with connections as shown on assembly drawing. Attach the assembly to the case with screws and lock washers.

Assembling the CAM SHAFT is simple. The cam is pinned to the shaft at the factory and normally is not removed during overhaul. Insert cam and shaft assembly into the governor housing; fasten front bearing plate and gasket to the case with four screws and plain washers. Secure screws

with safety-wire. Shaft must rotate freely after installation is completed.

The CAM FOLLOWER ASSEMBLY now goes in place. Assemble bushing, spring, and bearing on the cam follower shaft. The bearing pin serves as a guide to prevent rotation of the shaft. Insert cam follower assembly into the lower case, making sure that the keyway in the shaft faces the center contact assembly. Press bushing down against the spring while installing locking pin through the front case. Remember that the locking pin must enter the slot provided for it in the bushing.

The assembly of the CENTER CONTACT AND SERVO-CYLINDER is begun by inserting piston and spring into servo-cylinder. Then you place the steel base plate and gasket over piston shaft. Install the center contact assembly on shaft and secure with the barrel nut. The barrel nut is locked in position by a small locking pin which is placed into a slot in the piston shaft before installing the barrel nut. Bend the locking pin to fit a slot in the nut. Proper adjustment is obtained by gradually tightening the barrel nut until the assembly has .003 inch maximum end play between the sleeve and the washer when the shaft shoulder is against the lower washer. Excessive end play will result from having the barrel nut either too loose or too tight. Install the center contact and the servo-cylinder assembly into governor case and fasten into place with two screws and safety-wire. Connect the electrical lead from the center contact to the pressure safety switch.

To assemble the DECREASE-INCREASE RPM CONTACT, install washers, laminated shim, spacer blocks, contact plates and wire terminals on the cam follower shaft; then install the retaining nut. The parts are held in their proper place by a key in the shaft and in the micarta blocks.

The total gap between the faces of the oscillating and center contacts should be as follows—

Low Pressure Governor, 0.155 to 0.165 inch.
High Pressure Governor, 0.126 to 0.129 inch.

In service, the center contact gap of the high pressure governor may be allowed to increase to 0.136 of an inch before adjustment is necessary. The gaps may be adjusted by filing or placing a shim between the spacer blocks. Install center contact guiding stud and secure with safety-wire. Be sure the stud is straight before replacing. Do not bend stud while safety-wiring, since a bent stud will cause binding of the center contact assembly. Attach wire from pressure safety switch to center contact wire terminal, and secure nut by bending tabs of locking washer.

The FLYWEIGHT SPINDLE comes next. Assemble bearing to the valve body and secure with nut and cotter pin. Assemble flyweights and linkage to spindle. Secure the flyweight pivot pins in place with the four small locking pins. Attach aluminum shell to spindle with four screws and washers. Safety-wire the screws to holes in shell. On the high-pressure governor, install the shim in the bearing cup. Install valve body in spindle. Install scavenger idler gear in case. This gear should be rotated in the opposite direction of that indicated on plate attached to the case, and EASED rather than forced into place, since the worm gear engages with the cam-shaft gear. Place spindle assembly into the governor case. In early type governors, install ring on the drive end of the spindle shaft.

The PRESSURE PUMP is assembled as follows—

Rotate spindle so locking-pin hole is pointing toward idler gear well. Insert locking pin. Care should be taken that the pin is centered and flat ends are parallel with the spindle shaft. Place

drive gear over spindle shaft. Index with pin and slide into place. Place idler gear into well and index with drive gear teeth. Install snap ring on drive end of spindle. Set lower cover plate and paper gasket into place, insert screws and tighten.

To assemble the UPPER CASE, place the control shaft in the upper case and screw in the retaining nut until it bottoms. The nut may be faced off so as to obtain a slight amount of end play in the shaft. Cotter pin the nut. Mesh the spring adjusting rack with the control shaft, and install the take-off rpm stop arm so as to obtain the indexing dimension. The rack and control shaft should operate freely. Secure the take-off rpm stop arm with a cotter key. Install control arm at the proper angle on the shaft and secure with nut. Be sure that control arm is located on the correct side of the governor to meet the installation requirements. Place gasket on top face of lower governor case, install flyweight spring, and attach upper case assembly. Secure upper case with four nuts, washers, and safety-wire.

The RELIEF VALVE is assembled by inserting the bronze plunger into the steel sleeve; placing the relief spring (with taper end first) into the plunger; and inserting the complete valve assembly into governor case. Place locating screw with gasket through hole provided in the housing and at the same time through the hole in the steel sleeve. Depress the spring so the locating screw will move to the opposite hole on the other side of steel sleeve. Tighten locating screw. Install hexagon plug with gasket; tighten, and safety-wire.

BALANCING

Here's how you go about balancing the electric propeller—

Mount the propeller on a balancing mandrel. The power gear assembly should be in place during this process to hold the blades at the same angle, approximately halfway between low and high blade angles. Mount the propeller on an accurate knife-edge balance fixture, and test the balance with each blade in horizontal and vertical position. When the propeller is correctly balanced, it will have no inclination to rotate when placed in any position. If only slightly out of balance, one or more small balancing weights may be added to the blade-nut locking slots. These weights should be located in the proper slots to maintain vertical and horizontal balance. If the external weights aren't enough to correct the bad balance, try adding pieces of putty or modeling clay to the hub barrels of the "light" blades, in approximately the same line as the balancing material in the blade shank, until the propeller balances correctly.

Mark the "light" blades and weigh the putty, noting the exact weights. Place the propeller on the spindle of a checking table and remove the "light" blades. Remove the cork from the end of the balancing hole of any "light" blades. Into each balancing hole insert a quantity of lead wool exactly equal in weight to the putty used in test balance. Drive the lead wool in tight with a brass drift, and replace corks.

Reassemble the propeller and again check for balance. Replace the blade nut locking plates and lockwire. Make certain that the motor and blade-retaining nuts, blade clamps, screws, bolts, etc., are made secure with lockwire, cotter keys or lock washers. Once the propeller has been balanced, you should give it an operational check.

INSTALLATION

Your first consideration in the installation of electric propellers is SHAFT PREPARATION. Before you install a propeller on an engine shaft, the shaft must first be wiped clean with a clean cloth, and oiled with either castor oil or light engine oil. The cone faces of splined shafts must be clean. NUT PREPARATION CONSISTS of coating the threads of the nut and engine shaft with a mixture of 70 percent white lead and 30 percent lard or castor oil.

NOW, for the METHOD OF TIGHTENING—

Install the propeller on the shaft, sliding it back by hand, so that it seats on the taper of a tapered shaft, or the rear cone of a splined shaft. Install the propeller front cone and nut or in the case of the tapered hub, only the nut. With a suitable bar or wrench, tighten the propeller. (Use a bar 2 or 3 feet in length, with the force of one man exerted upon it.) Install the snap ring after the lock nut has been tightened in the tapered shaft insert, or the crankshaft nut has been tightened on the spline shaft and the pin installed.

GOVERNOR INSTALLATION—

The governor is designed for mounting on the standard S. A. E. governor drive pad on the engine nose, although special adapters are available to permit installation on an accessory drive on the rear of the engine. A gasket is furnished with the governor for installation between the governor and the engine pad, although the standard gasket furnished with the engine may be used if it is of similar composition. DO NOT use sealing compounds on this gasket.

The RELAY should be mounted in the engine compartment in an accessible location, preferably on the firewall. If the relay is located on the engine

mount, it is advisable to provide a support which will minimize vibration. The relay is mounted in a junction box provided for the connection of all propeller wiring in the vicinity of the engine compartment. It can be supplied with or without connectors, according to the requirements of the particular installation.

WIRING AND CONDUITS—

All propeller wiring should be carried in conduits separate from all other airplane wiring. Solid conduits should be used whenever possible, although flexible conduit is normally used from the governor and brush assembly to the relay box in the engine compartment. Synthetic rubber covering is desirable on the flexible conduits. In high temperature areas, conduits should be protected with asbestos.

Conductors for propeller wiring must be of sufficient size to limit the voltage drop in the complete circuit between the propeller and power source as follows—

For 12-volt installations, the voltage drop must not exceed 1.2 volts when the circuit load is 20 amperes.

For 24-volt installations, the voltage drop must not exceed 1.2 volts when the circuit load is 10 amperes.

All terminal lugs must be firmly attached to the ends of the wires and care must be taken to prevent terminals from touching other terminals or connector bushings. Wedge-on terminals or an equivalent type of wire terminal may be used.

All propeller SWITCHES must be within easy reach of the pilot. The best location for these switches is slightly FORWARD and to the LEFT of the pilot on a SINGLE CONTROL airplane, and in the CENTER on a MULTI-CONTROL airplane. It is best

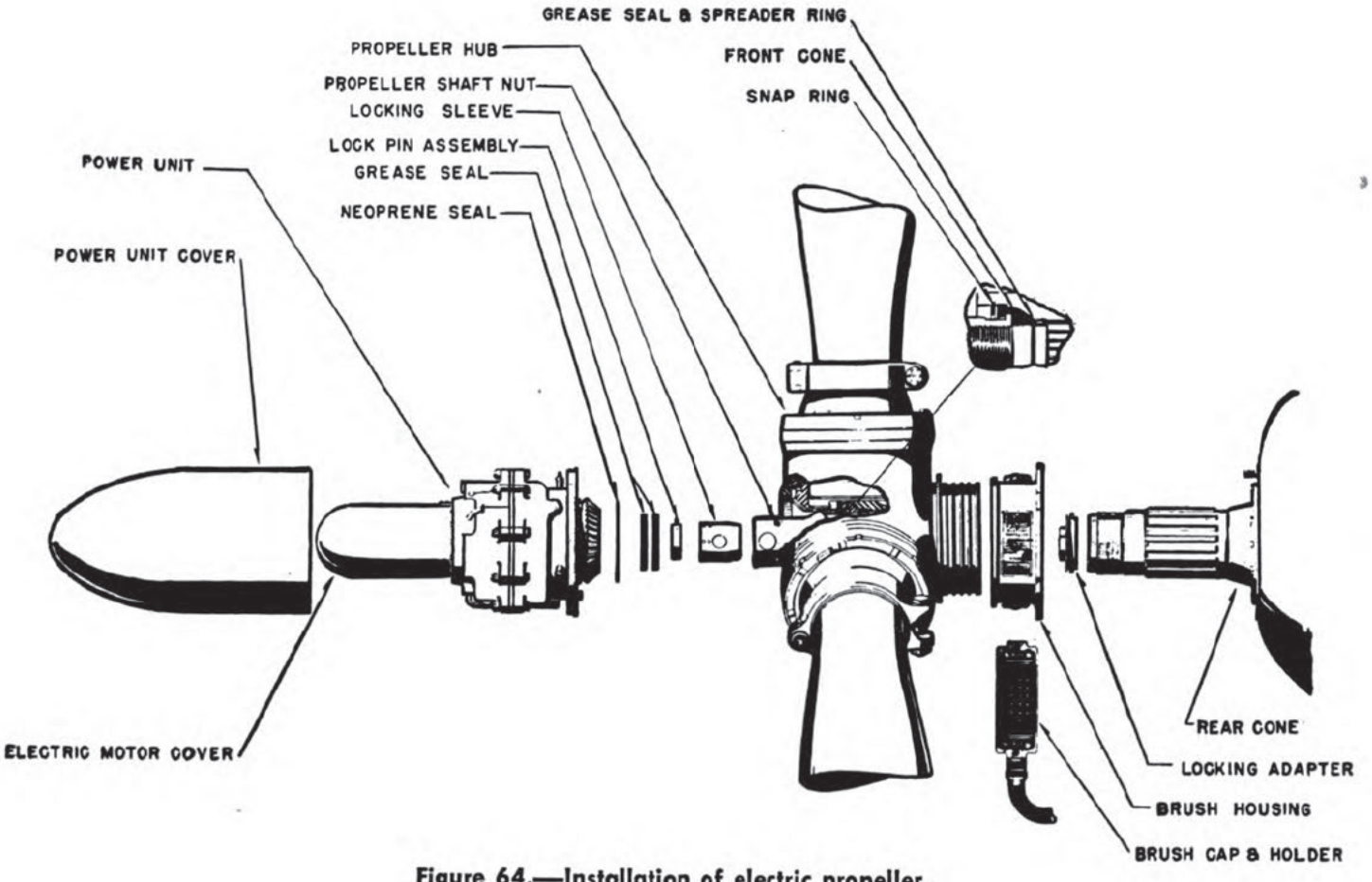

Figure 64.—Installation of electric propeller.

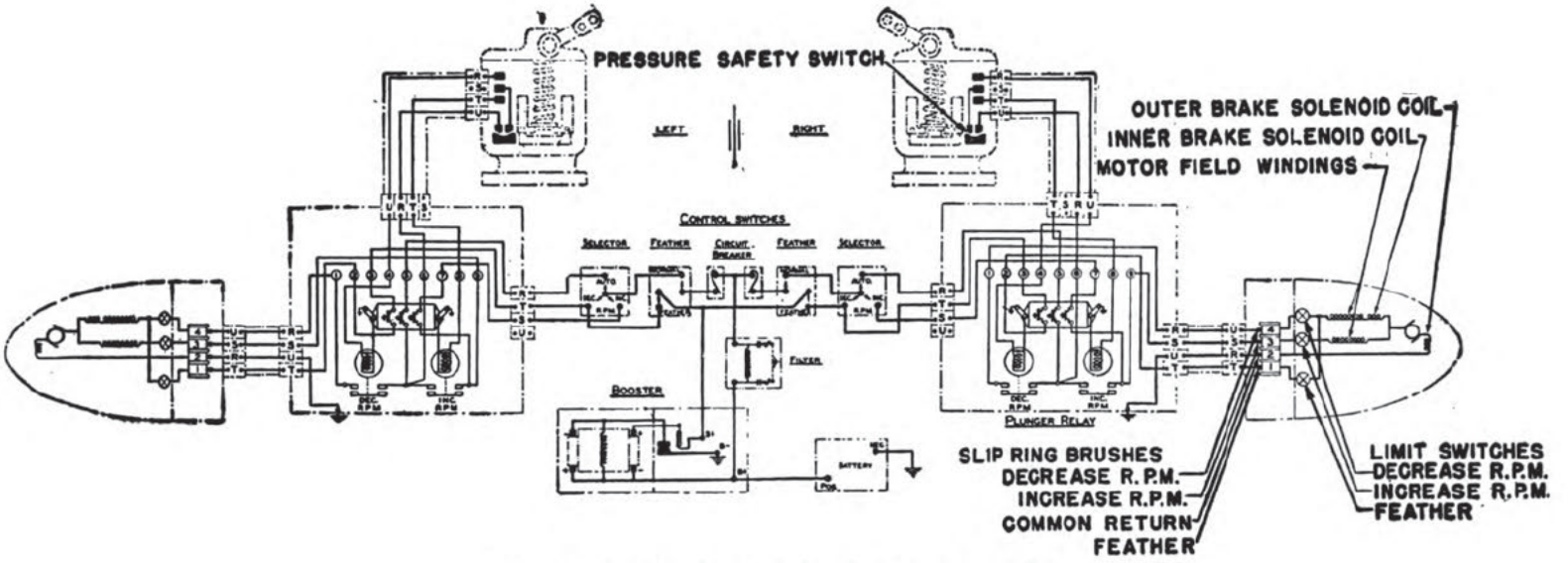

Figure 65.—Wiring Diagram (for twin engine).

to group all propeller switches together, if possible, on a small individual panel.

The governor is provided with a lever which can be replaced with a pulley in the event that cable control is used. The upper governor case, which carries the control shaft, can easily be located in any one of four positions so that it may readily be adapted to various installation requirements. A take-off rpm stop is provided as an integral part of the governor. For angular movements of the governor control against rpm settings, the governor installation drawing should be consulted.

If a radio frequency FILTER is required, it is placed in the positive circuit to the overload circuit breaker. This eliminates any possibility of radio interference (caused by propeller operation) from following the wiring into the radio equipment. The filter consists of an induction coil and a condenser mounted in a box.

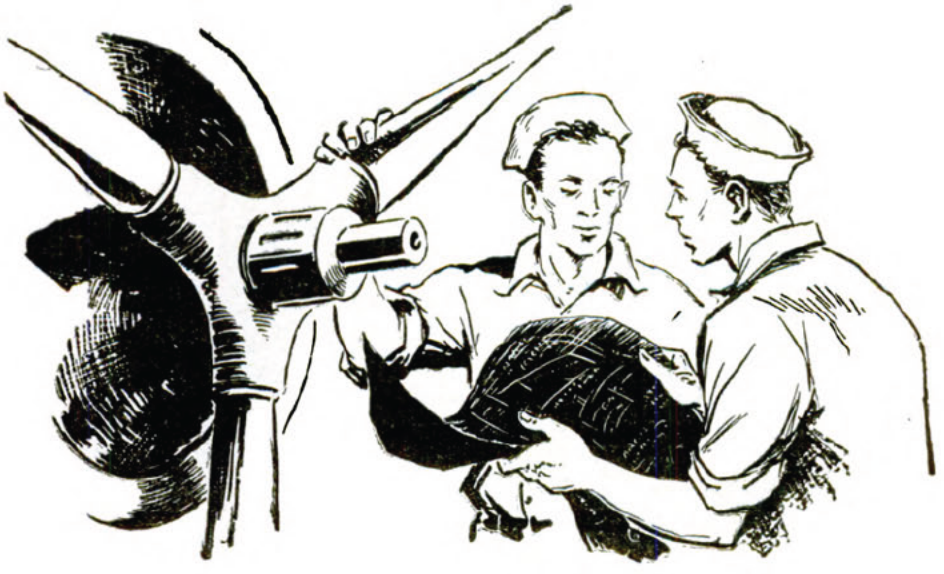

CHAPTER 6

TROUBLE-SHOOTING

NOBODY BUT YOU

Each type of propeller presents its own maintenance and repair problem. You can't hope to know how to handle all of them right away, but you can be prepared to solve some of the common troubles that may beset you. To prepare yourself, learn what causes trouble most often, and what you can do about it.

The propeller must be inspected daily for any damage that may have occurred during the previous flight.

Before any airplane is secured for the day, the propeller or propellers should be coated with used engine oil to prevent corrosion.

Tips of propellers deserve special attention as they are constantly being subjected to those two partners in crime—EROSION and CORROSION. Use fine emery cloth to remove any roughness. TIPS

MUST BE CONSTANTLY SMOOTHED IN THIS MANNER OR LARGE HOLES WILL APPEAR. EVENTUALLY THIS WILL NECESSITATE REMOVAL OF THE TIP, AND CONSEQUENT REDUCTION OF THE PROPELLER DIAMETER.

Nicks and sharp dents on the leading edges, or gashes on the blade faces, are particularly dangerous as they greatly reduce the fatigue strength at that particular point. A failure may result unless they are removed promptly.

The maintenance of hollow steel blades varies slightly from that of the aluminum alloy type. To remove corrosion, use steel wool or a fine emery cloth. Dress down the raised edges of scratches or nicks with a fine stone or with emery cloth—BUT, don't mistake a CRACK in the blade for a scratch. (If a blade appears to be cracked, it should be magnafluxed. In this case, of course, the blade must be removed.) Use only these tools, and never remove more metal than is absolutely necessary. And always follow the directions in the Bureau of Aeronautics limitation charts.

Small shallow dents on the leading or trailing edge of steel blades, are of no consequence and do not require repair. Note that this is just the REVERSE of the proper procedure for aluminum alloy blades.

Minor accidents, such as bumping into the propeller in the hangar, striking a wave with one blade, attempting to move the ship by pulling on one propeller blade, may throw the propeller OUT OF TRACK. All or any one of these things may cause vibration, and should be checked immediately. In any case, propeller tracks should be checked during the routine periodic inspection.

The best way to check for track is to attach a fixed point to some part of the airplane (preferably the landing gear strut) so that it touches the

blade face 6 inches from the extreme tip of the blade. Rotate the propeller until the next blade is in the same position and note the distance between the blade face and the fixed point. Repeat the operation for each of the other blades. If any blade is out of track beyond specifications, it should be removed and realined.

Checking the BLADE ANGLE is simply a determination of how much the flat side of the blade slants from the plane of rotation. The first operation is to fix a point that, for checking purposes, represents that plane. This point is the zero of the vernier scale and is fixed by placing the protractor (a Universal Protractor) vertically against the end of the hub nut or any other convenient surface known to lie in the place of propeller rotation with the angle of the blade. This, when the check is completed, is indicated by the number of whole degrees and tenths of a degree between the zero of the vernier scale and the zero of the degree scale, after the degree scale has been adjusted to the spirit level with the protractor against the flat side of the propeller blade.

Ten points of the vernier scale are equal to nine points of the degree scale. The graduations of the vernier scale represent tenths of a degree, while those of the degree scale represent whole degrees. The number of tenths of a degree in the blade angle are determined by the number of vernier scale spaces between the zero of the vernier scale and the vernier scale graduation line that is the nearest to perfect alinement with a degree scale graduation line. This reading must always be made on the vernier in the same direction from the vernier zero that the degree scale has been moved.

Of course, you could check the pitch by using a simple combination square. But it's a tricky

method. You can easily go wrong by it. It isn't recommended except in cases of emergency.

The following are the operations for checking and setting blade angles when the propeller is ON THE ENGINE—

With a lead pencil, mark on the face of each blade to be checked, the blade angle station specified for the particular propeller. Turn the propeller until the first blade is horizontal with the leading edge up. Swing corner spirit level out as far as it will go from face of the protractor. By turning the disk adjuster, aline zeros of both scales and lock the disk to the ring. This lock is a pin that is held engaged by a spring. It is pulled outward and turned 90° to hold it in the released position. Release ring-to-frame lock, and by turning ring adjuster, place both zeros to the top. This lock is a right-hand screw with a thumb nut.

While holding protractor (by the handle with curved edge up) in the left hand, place forward vertical edge across outer end of propeller hub retaining nut or any suitable propeller hub flat surface that is in the plane of propeller rotation (right angle to crankshaft centerline). Then, keeping protractor vertical by means of corner spirit level, turn ring adjuster until center spirit level is horizontal. This sets the zero of the vernier scale at a point representing the plane of the propeller rotation.

Lock ring to frame, and hold the protractor (by the handle with curved edge up) in the right hand, release disk-to-ring lock and place forward vertical edge (edge opposite the one first used) against blade at station specified for the particular propeller. Keep protractor vertical by means of corner spirit level and turn disk adjuster until center spirit level is horizontal. By this adjust-

ment, the number of degrees and tenths of a degree between the two zeros indicate the blade angle. If necessary, make required adjustment

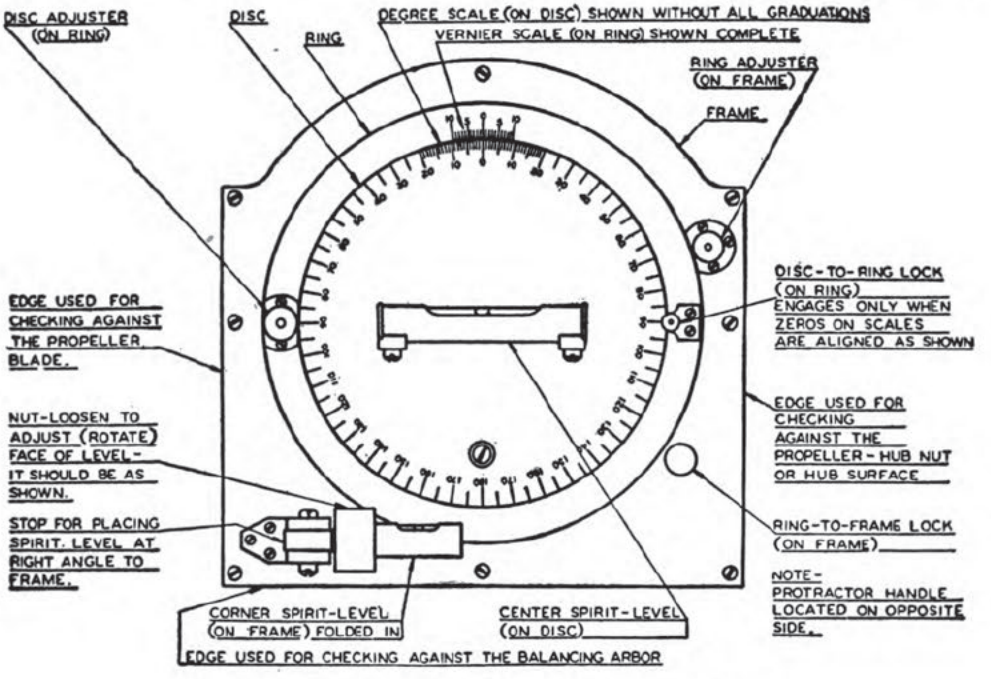

Figure 66.—Universal propeller protractor.

of blade and lock it in that position. Then repeat these operations for each of the remaining blades to be checked.

HYDROMATIC PROPELLERS

TROUBLE	PROBABLE CAUSE	REMEDY
Inability to attain take-off RPM on the Blocks.	1. Wrong setting of governor and incorrect rigging of control system.	Reset governor and rerig system.
	2. Improper adjustment of high RPM stop in propeller dome assembly.	Reset stop.
	3. Low engine power.	See engine manual.
	4. Erroneous reading tachometers, manifold pressure gauge.	Calibrate instruments.
Overspeeding on take-off.	1. Wrong setting on governor and/or incorrect relationship between governor and cockpit lever.	Rerig and reset.
	2. Insufficient exercise of propeller mechanism prior to take-off.	Move control through constant speed range with engine running.
	3. Backlash in cockpit control.	Rerig control system.
	4. Too rapid throttle opening.	Advance throttle slowly.
	5. Poor or incorrect gaskets between distributor valve and propeller shaft; and between governor base and engine mounting pad.	Install new gaskets.
	6. Sticky governor pilot or relief valve.	Disassemble and clean.
	7. High engine transfer ring leakage.	Replace rings according to engine manufacturer's specifications.
	8. Erroneous reading tachometers, manifold pressure gauge.	Calibrate instruments.

Poor synchronization.	1. Ignition trouble.	Check with ignition or megger.
	2. Poor carburetion.	Consult carburetor manual.
	3. Backlash in governor control system.	Rerig control system.
	4. Sluggish pilot valve.	Disassemble and clean.
	5. Sluggish governor relief valve.	Disassemble and clean.
	6. Sticky piston action in propeller dome assembly.	Remove dome shell. Clean and lubricate piston gasket. If piston contact area of dome is scored, polish with wet and dry 300 emery.
	7. Loose piston gasket.	Tighten piston gasket nut.
	8. Variation in engine transfer ring leakage.	Replace rings.
Leakage.	1. At Crankshaft Breather.	
	a. Incomplete engine scavenging or excessive blow-by.	Consult engine manual.
	b. Loose distributor valve.	Tighten distributor valve or engine shaft extension.
	c. Leaky gaskets.	Replace gaskets.
	2. Dome Breather Hole.	
	a. Damaged seal.	Replace seal.
	b. Loose nut.	Tighten nut.
	c. Washer missing.	Install washer.
	3. Interference between breather pipe shaft and distributor valve oil transfer plate fillet.	Rework fillet.

TROUBLE	PROBABLE CAUSE	REMEDY
Leakage.	4. Dome Retaining Nut.	
	a. Damaged seal.	Replace seal.
	b. Loose nut.	Tighten nut.
	5. Blades.	
	a. Damaged packing or molded chafing ring.	Replace packing and molded chafing ring by split type chafing ring.
	6. Barrel Half Seals.	
	a. Damaged seals.	Replace seals.
	b. Improper closure of barrel halves.	Remove burrs from parting surfaces of barrel half.
	7. Barrel Spider Packing.	
	a. Damaged packing.	Replace packing.
	8. Rear Cone.	
	a. Damaged spider shaft oil seal.	Replace seal.
	b. Spider shaft oil seal washer installed improperly.	Install in proper sequence—washer, seal, ring.
	c. Spider shaft oil seal washer missing.	Install washer.
	9. General.	
	a. Engine thrust plate seal.	Consult engine manual.
Roughness.	1. Spark plugs or ignition.	Replace spark plugs—check wiring.
	2. Propeller unbalance.	Check balance (effects will be greater at high rpm).

	3. Blade angles vary.	Correct angles (effects will be greater at high rpm).
	4. Ice on propeller.	Increase rpm for a short period.
	5. Engine part failure.	Feather propeller.
	6. Unknown cause.	Feather propeller.
Failure to Feather.	1. Batteries low.	Recharge batteries.
	2. Faulty electrical system.	Check power and control circuits of feathering pump.
	3. Excessive leakage.	
	a. Engine transfer rings.	Replace rings according to engine manufacturer's specifications.
	b. Improper distributor valve installation.	
	c. Poor or incorrect gaskets between distributor valve and propeller shaft and between governor base engine mounting pad.	Check tightness or interference. Install new gaskets.
Failure to Unfeather.	1. Sheared coupling in feathering pump.	Replace coupling.
	2. Restricted oil supply to feathering.	Check feathering pump inlet lines for foreign material and bleed line.
	3. Defective feathering pump.	Replace pump.

ELECTRIC PROPELLERS

TROUBLE	PROBABLE CAUSE	REMEDY
Rough propeller operation.	1. Malfunctioning engine (for example, cold plugs, bad magnetos, poor mixture, etc.)	Have the engine checked for proper operation.
	2. Scarred or damaged blades or blade cuffs.	Visually inspect the blades or blade cuffs for damage. Repair or replace.
NOTE		
A rough propeller may cause excessive vibration in the airplane.	3. Blades not all set at the same angle.	Check the blade angle at the proper station. Set blades at correct angle.
	4. Blades out of track.	Check blades for track. Replace bent blades.
When this condition is attributed to the propeller itself, the trouble usually lies in the blades and not in the propeller blade operating mechanism.	5. Loose propeller shaft nut.	Tighten nut with force of 250 to 300 pounds on the end of the 3½-foot bar.
	6. Propeller out of balance.	Balance propeller.
	7. A rough engine.	Test engine with similar propeller assembly of the same type taken from an airplane operating properly. If roughness still exists after testing with substitute propeller, check engine for proper operation.
	8. Cones bottoming.	

Engine surging or hunting.	1. Cross or tail winds during engine run-up or preflight check.	Point nose into wind.
	2. In automatic constant speed:	
NOTE	a. Faulty propeller control operation.	Operate propeller in fixed pitch to determine cause—faulty propeller control, operation or faulty operation other than propeller or propeller operation.
Hunting is defined as a steady oscillation of rpm above and below a desired speed. Surging is an oscillation similar to hunting except that its range becomes less with each cycle and finally dies out.	(1) If surging ceases with propeller operating in fixed pitch, the trouble lies in the automatic constant speed control, and may be caused by:	
	(a) Improper adjustment of relay contact points (chatter).	Measure relay contact point gaps and adjust if necessary. Measure relay gaps between outer edge of armature head and moving contact assembly. Adjust if necessary.
Engine surging or hunting.	(b) "Blown" resistor, across relay coils.	Inspect resistor and replace if blown.
		NOTE
		On plunger type relay-check coil resistance. Replace coil if not at the exact specified rating.

TROUBLE	PROBABLE CAUSE	REMEDY
Engine surging or hunting.	(c) Improper adjustment of governor contact points.	Replace governor. NOTE Refer discarded governor to proper agency for adjustment and calibration.
	(d) Insufficient propeller brake clearances.	Check brake and adjust for proper clearances.
	b. Faulty operation other than propeller or propeller control.	
	(1) If surging continues with propeller in fixed pitch, the trouble may be caused by:	
	(a) Malfunctioning tachometer.	Adjust tachometer.
	(b) Malfunctioning engine.	Have engine checked.
	3. Excessive power unit brake clearance may also cause surging.	Operate propeller in fixed pitch.
	a. If engine does not remain on-speed when operated in fixed pitch, but gradually increases its rpm, the trouble is caused by a slipping brake.	Adjust power unit brake clearances.

	4. A sluggish propeller operation may also cause hunting. This condition is more noticeable when rapid changes in control settings or airplane attitude are made.	
Sluggish propeller operation.	1. At take-off.	
	a. Weak battery.	Check battery, charge or replace.
	b. Malfunctioning generator.	Check generator to see that it is operating properly at the desired current rating. Repair or replace.
NOTE Sluggish operation is recognized by a slow response of the propeller to changes in airplane control, airplane attitude, and/or changes in propeller control. When the condition exists, rpm will increase or decrease suddenly, gradually returning to on-speed.		
Sluggish propeller operation.	2. Improper selective fixed pitch operation.	With engine not running, operate propeller selector switch in "DECREASE RPM" and "INCREASE RPM" to determine cause.
	a. If test discloses that propeller blades do not operate normally, the trouble may be attributed to:	

TROUBLE	PROBABLE CAUSE	REMEDY
Sluggish propeller operation.	(1) Improper power unit brake clearance.	Adjust power unit brake and check for proper operation.
	(2) Grease, oil or carbon dust on slip ring or brush block assembly.	Clean both assemblies using a clean dry rag. Never use cleaning solvent on brushes.
	(3) Slip ring brushes sticking in holder.	Check brushes for proper operation. Replace brushes having weak or compressed springs. Inspect for binding of brushes in brush holder. Replace brushes which have frayed or broken leads, and clean brush holder.
	(4) Slip ring brushes worn beyond specified tolerance.	Check brushes for wear. Replace, if necessary.
	(5) Loose connections in propeller wiring.	Check propeller wiring and tighten all loose connections. (Pay special attention to electrical connectors.) Examine all electrical connectors. Make certain they are clean.
	(6) Foreign matter between hub and power unit electrical contacts.	Inspect contacts and clean if necessary. Investigate and eliminate source of trouble.

Sluggish propeller operation.	(7) Improperly adjusted hub or limit switch contacts.	Check contacts and adjust according to specifications.
	(8) Worn brushes on electric motor.	Inspect brushes. Replace if necessary.
	(9) Incorrect lubricants at low temperature flying.	If above checks fail to reveal trouble, check oil in speed reducer and grease in hub. Make certain they are the specified type.
	3. If above test, with engine not running, reveals propeller operating normally in selective fixed pitch, the trouble lies in the automatic constant speed controls. Check for:	
	a. Sludge in governor. This is usually the trouble in 90 percent of sluggish operation cases in automatic operation.	Check screen (when furnished) in governor gasket; flyweight assembly; and governor spindle valve for sludge. Clean if necessary.
	b. Incorrect governor contact point clearance.	Check contact point clearance. If not within the specified tolerance, replace the governor.
	c. Dirty governor contact points.	Clean governor contact points if necessary.

TROUBLE	PROBABLE CAUSE	REMEDY
Sluggish propeller operation.	d. Relay improperly adjusted.	Check thickness of contact points. Replace if necessary. Adjust alinement of contacts, and contact gap point preload. Check relay for proper operation.
	e. Weak relay coil.	Check relay coil resistance. Replace relay coil if not at specified rating.
	f. Weak or broken relay resistor.	Check resistance of resistor. Replace if not at specified rating.
		NOTE In the plunger type relay, the resistor is part of the coil. Check coil resistance and replace coil, if not at the exact specified rating.
		NOTE If an ohmmeter is not available to make these checks, replace the relay.

	g. If none of these checks reveal source of trouble—	Replace governor, and send to proper agency for adjustment and calibration.
Circuit breaker fails to stay closed.	1. An overload condition in the propeller electrical system caused by:	
	a. Malfunctioning brake (dragging brake).	Check and adjust the brake clearance. Check brake for proper operation.
	b. Defective switch or one having an incorrect amperage rating.	Check switch. Replace if necessary.
	c. Motor binding.	Inspect motor and relieve binding.
	d. Shorted propeller wiring.	Check wiring. Locate and repair short circuit.
		NOTE
		Each section of the propeller electrical system should be completely disconnected, one at a time, and that section bridged. If unit operates when section is bridged, the short circuit is in the disconnected section.

TROUBLE	PROBABLE CAUSE	REMEDY
Failure to obtain take-off rpm in automatic constant speed control.	1. Test to determine cause.	Hold selector switch in the "INCREASE RPM" position and see if take-off rpm is obtained.
	a. If take-off rpm is obtained, the cause is:	
	(1) Governor control linkage improperly adjusted.	Adjust springback of propeller control lever to ⅛-inch, with governor take-off rpm stop screw against the stop.
	(2) Governor set at incorrect take-off rpm.	Adjust governor take-off rpm stop screw, but only when conditions warrant this adjustment. Make sure the screw is safetied.
	b. If engine fails to obtain take-off rpm when tested in selective fixed pitch, the cause may be:	
	(1) Improper engine operation.	Have engine operation checked.
	(2) Incorrect low blade angle setting.	Reindex blades to correct the low blade angle. If angle is 12° off, adjustment is off one complete blade gear tooth. If off only a few degrees, check setting of power gear with master index.

Propeller inoperative in both automatic constant speed control and in selective fixed pitch control. (See fig. 67.)	1. Weak or dead battery.	Charge or replace battery.
	2. Generator not charging.	Repair generator.
	3. Broken ground connection at battery and/or relay.	Repair connection.
	4. An open circuit in the wiring, or switches, from battery through selector switch.	Check switches and wiring, and repair.
	NOTE If booster is used, it is only necessary to check positive lead from battery to the junction where the circuit divides toward booster or normal propeller circuit.	
	5. Open circuit in the common return.	Check for continuity from either the increase or decrease rpm terminal screw to the point at which the propeller circuit is grounded. Terminal screws are found in the side of the speed reducer housing. Repair break.

TROUBLE	PROBABLE CAUSE	REMEDY
Propeller inoperative in both automatic constant speed control and in selective fixed pitch control. (See fig. 67.)	6. Inoperative power unit motor caused by:	
	a. Faulty motor brushes.	Check and replace motor brushes.
	b. Faulty rigging.	Check and repair rigging.
	c. Faulty wire terminals.	Check and repair wire terminals.
	d. Open circuit in armature.	Check armature for an open circuit. Replace motor if armature has an open circuit.
	e. Short circuit in armature.	Check armature for a short circuit. Replace motor if armature is shorted.
Propeller inoperative in selective fixed pitch control increase rpm. All other circuits operate. (See fig. 68.)	1. Open circuit between increase rpm side of selector switch and number one relay terminal (number nine terminal in plunger type relay).	Locate and repair break.
Propeller inoperative in selective fixed pitch control decrease rpm. All other circuits operate. (See fig. 69.)	1. Test to determine cause.	Hold selector switch in "DECREASE RPM." Then apply test light from number seven relay terminal to ground (number two to ground in plunger type relay).
	a. If light fails to light, the cause is an open circuit between decrease rpm side of selector switch and number seven relay terminal number two terminal in plunger type relay).	Locate and repair break.

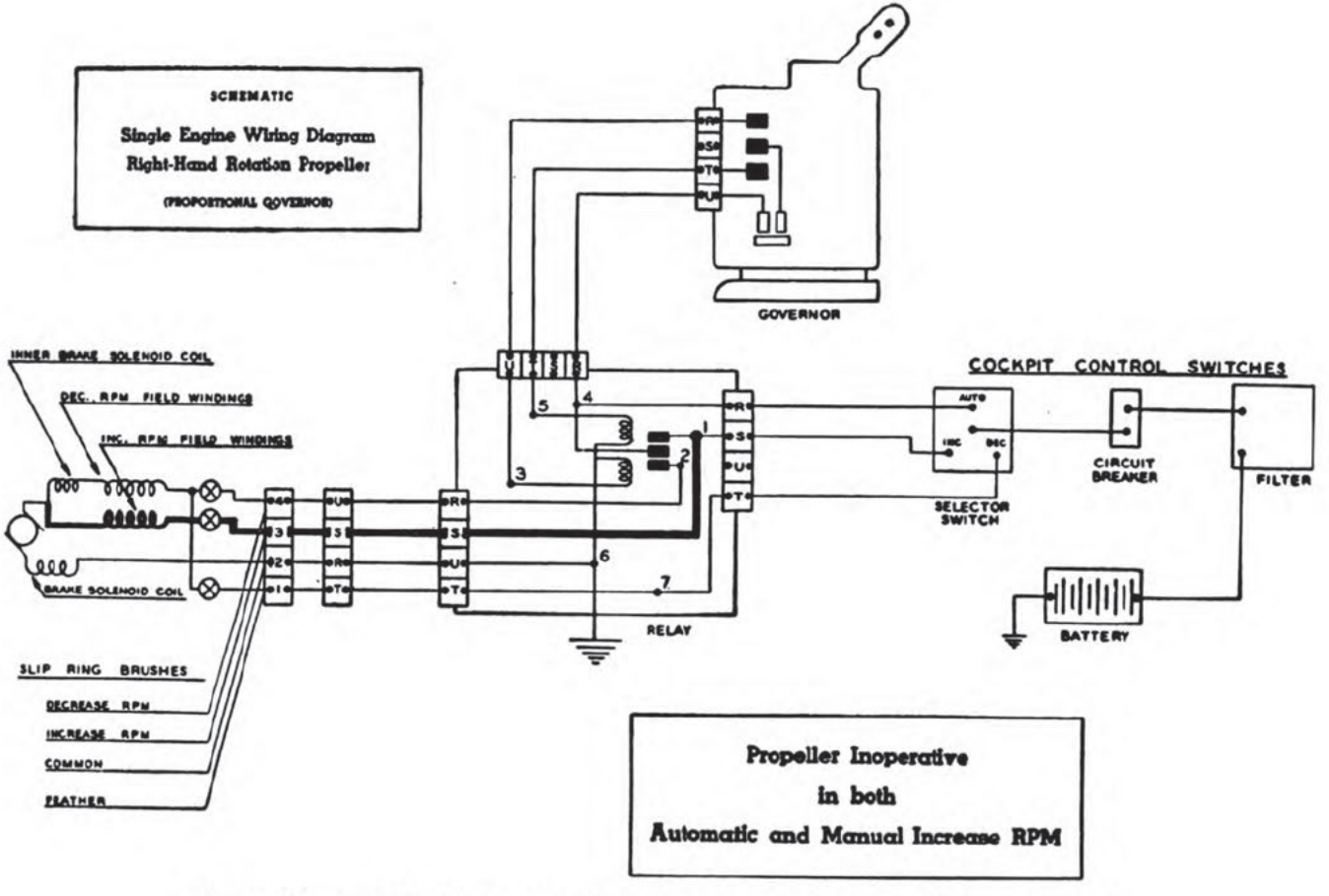

Figure 67.—Propeller inoperative in both automatic and manual increase RPM.

TROUBLE	PROBABLE CAUSE	REMEDY
Propeller inoperative in selective fixed pitch control decrease rpm. All other circuits operate. (See fig. 69.)	b. If light lights—	Apply test light from number one to two slip ring brushes at block assembly.
	c. If test light at brush block fails to light—	
	(1) Open circuit is between number one slip ring and number seven terminal two in plunger type relay.	Locate and repair break.
	(2) If test light at brush block lights—	
	(a) Break is in the power unit.	Locate trouble by removing power unit and power gear assembly on which are machined two lugs, forming the fixed mechanical stop. Then energize power unit by touching the leads to the limit switch contact points. Make and break circuit at battery.
	2. If power unit operates, the cause is—	
	a. Open circuit between feather slip ring and hub contact point.	Locate and repair break.

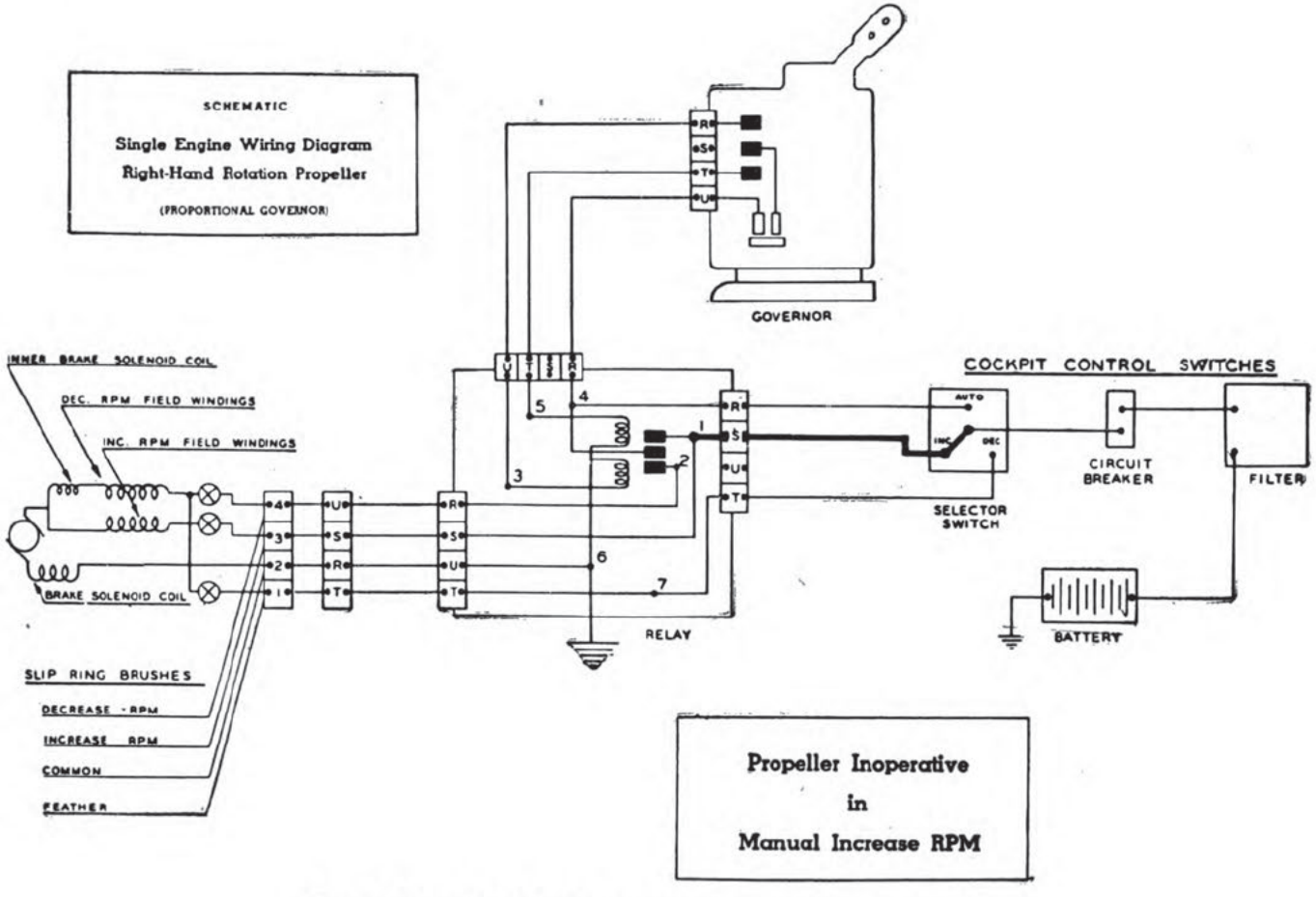

Figure 68.—Propeller inoperative in manual increase RPM.

TROUBLE	PROBABLE CAUSE	REMEDY
Propeller inoperative in selective fixed pitch control decrease rpm. All other circuits operate. (See fig. 69.)	b. Feather hub contact point and/or limit switch point out of adjustment.	Adjust hub and/or limit switch contact points to specified tolerances.
	3. If power unit fails to operate, the trouble is:	
	a. Open circuit in the feather motor lead.	Check motor lead between motor terminal and power unit connector stud, and repair break.
	b. Open circuit between feather limit switch contact point and terminal stud in speed reducer housing.	Replace entire contact point assembly.
Propeller inoperative in automatic constant speed control. All other circuits operate. (See fig. 70.)	1. Test to determine cause.	Place selector switch in "AUTOMATIC CONSTANT SPEED" and check with test light from number four relay terminal to ground (number five in plunger type relay).
	a. If light fails to light, the cause is an open circuit between number four relay terminal (number five in plunger type relay) and automatic side of selector switch.	Locate and repair break.

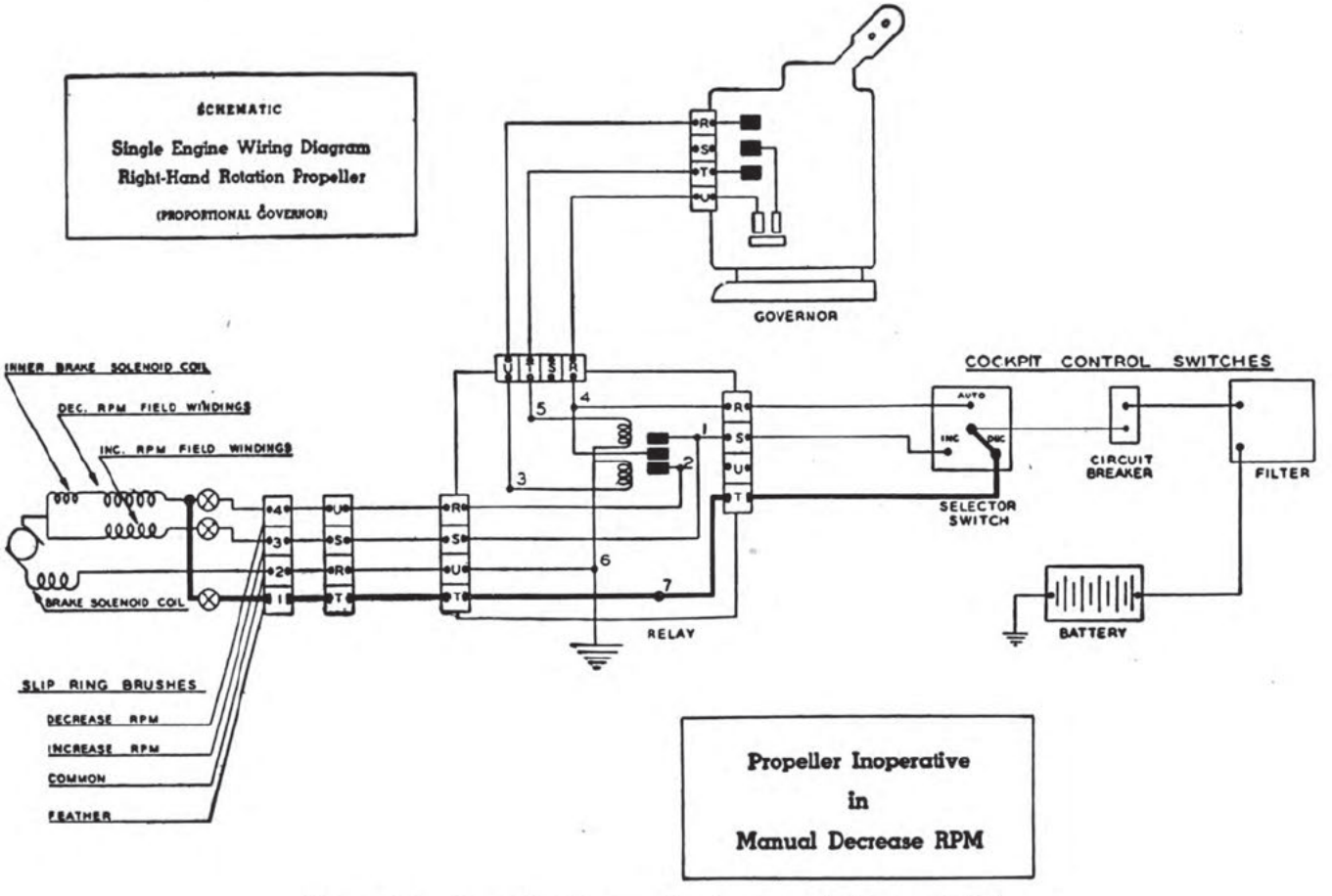

Figure 69.—Propeller inoperative in manual decrease RPM.

TROUBLE	PROBABLE CAUSE	REMEDY
Propeller inoperative in automatic constant speed control. All other circuits operate. (See fig. 70.)	b. If light lights—	
	(1) If the propeller operates, the trouble lies in one of the following: faulty governor electrical connections; incorrect adjustment of governor contact points; pressure safety switch fails to close.	Remove electrical connector at governor. Bridge from "U" to "R" or from "U" to "T." Inspect and repair governor electrical connections, contact points or safety switch.
	(2) If the propeller fails to operate, when bridged from "U" to "T" or "U" to "R", the cause is an open circuit in the wiring between the governor and relay.	Locate and repair break.

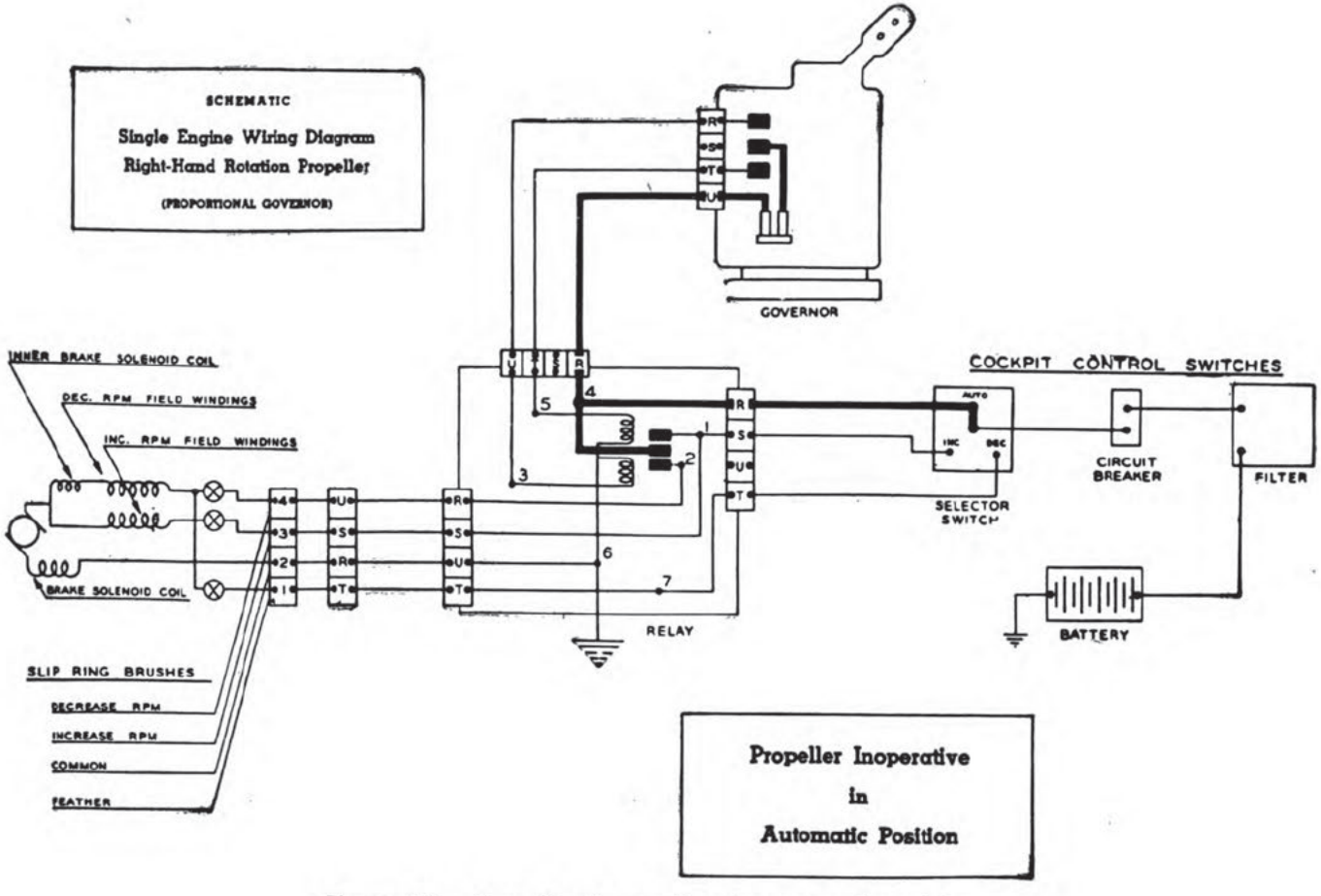

Figure 70.—Propeller inoperative in automatic position.

TROUBLE	PROBABLE CAUSE	REMEDY
Propeller inoperative in automatic constant speed increase rpm circuit. All other circuits operate, including the decrease rpm circuit of the automatic constant speed control. (See fig. 71.)	1. Test to determine cause.	Place selector switch in automatic constant speed control. With a jumper wire, jump from numbers four to five relay terminals (five and eight in plunger type relay).
	a. If the propeller operates after jumping numbers four to five relay terminals, the trouble may be caused by: open circuit in governor electrical connections; contact points not making contact; or open circuit in wiring between governor and relay. To locate actual source, remove electrical connector at governor, and bridge "U" to "T" with thin safety wire.	

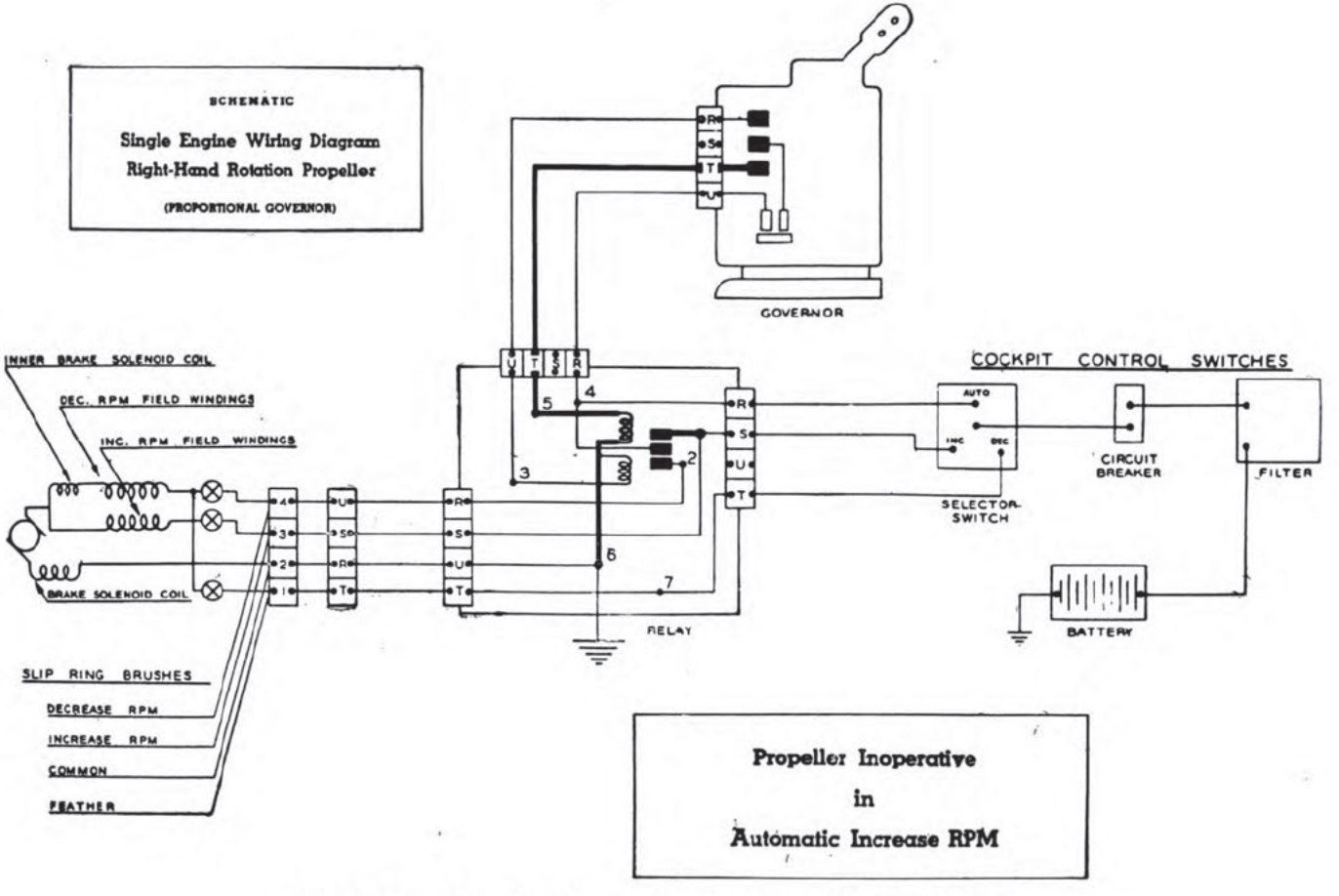

Figure 71.—Propeller inoperative in automatic increase RPM.

TROUBLE	PROBABLE CAUSE	REMEDY
Propeller inoperative in automatic constant speed increase rpm circuit. All other circuits operate, including the decrease rpm circuit of the automatic constant speed control. (See fig. 71.)	(1) If propeller operates with connector bridged from "U" to "T", the cause is:	
	(a) Open circuit in governor electrical connections.	Clean or repair connections as required.
	(b) Contact points not making contract.	Adjust or clean points as required.
	(2) If the propeller fails to operate with the connector bridged from "U" to "T" the cause is:	
	(a) Open circuit in wiring between governor and relay.	Locate and repair break.
	b. If propeller fails to operate when relay terminals four to five (five to eight in plunger type relay) are jumped, listen for a click in the relay armature.	
	(1) If no click is heard, the cause may be traced to loose or open relay coil connections or open coil winding.	Repair, ground or replace relay coil, if necessary.

	(2) If a click is heard, relay contact points are dirty or out of adjustment.	Check relay contact points, clean points or adjust as required.
Propeller inoperative in automatic constant speed decrease rpm circuit. All other circuits operate, including increase rpm circuit of the automatic constant speed control. (See fig. 72).	1. Test to determine cause.	Place selector switch in automatic constant speed control. With jumper wire, jump from numbers four to three relay terminals (five and four in plunger type relay).
	a. If propeller operates after jumping numbers four to three relay terminals, the trouble may be caused by: open circuit in governor electrical connections; contact points not making contact; or open circuit in wiring between governor and relay. To locate actual source, remove electrical connector at governor, and bridge "U" to "R" with thin safety wire.	
	(1) If propeller operates with connector bridged from "U" to "R", the cause is:	
	(a) Open circuit in governor electrical connections.	Clean or repair connections as required.

TROUBLE	PROBABLE CAUSE	REMEDY
Propeller inoperative in automatic constant speed decrease rpm circuit. All other circuits operate, including increase rpm circuit of the automatic constant speed control. (See fig. 72.)	(b) Contact points not making contact.	Adjust or clean points as required.
	(2) If propeller fails to operate with connector bridged from "U" to "R" the cause is:	
	(a) Open circuit in wiring between governor and relay.	Locate and repair break.
	b. If propeller fails to operate when relay terminals numbers four to three (five to four in plunger type) are jumped, listen for a click in the relay armature.	
	(1) If no click is heard, the cause may be traced to loose, or open relay coil connections, or to an open coil winding.	Repair, ground, or replace relay coil, if necessary.
	(2) If a click is heard, the relay contact points are dirty or out of adjustment, or there is an open	Clean relay contact points, or adjust as required.

circuit between the decrease rpm relay contact point and the power unit motor.

(3) If the propeller still fails to operate after cleaning or adjusting points, then check with test light from numbers four to two brushes, at the brush block, while jumping from numbers four to three terminals, at the relay (five to four on plunger type relay).

(a) If the light fails to light, there is an open circuit between the brush block and the decrease rpm relay contact point. — Locate and repair break.

TROUBLE	PROBABLE CAUSE	REMEDY
Propeller inoperative in automatic constant speed decrease rpm circuit. All other circuits operate, including increase rpm circuit of the automatic constant speed control. (See fig. 72.)	(b) If the light lights, the cause is an open circuit between number four slip ring and the power unit motor, at the point where the selective fixed pitch control leads and the automatic constant speed control leads meet in the motor.	Locate trouble by removing power unit and power gear assembly on which are machined the two lugs forming the fixed mechanical stop. Then energize power unit by touching the leads to the limit switch contact point. Make and break circuit at battery.
	(1) If the power unit operates, the cause is:	
	(a) Open circuit between the decrease rpm slip ring and hub contact point.	Check continuity between slip ring and hub contact point. Locate and repair break.
	(b) Decrease rpm hub contact point and/or power unit switch out of adjustment.	Check tolerances and adjust to specifications.

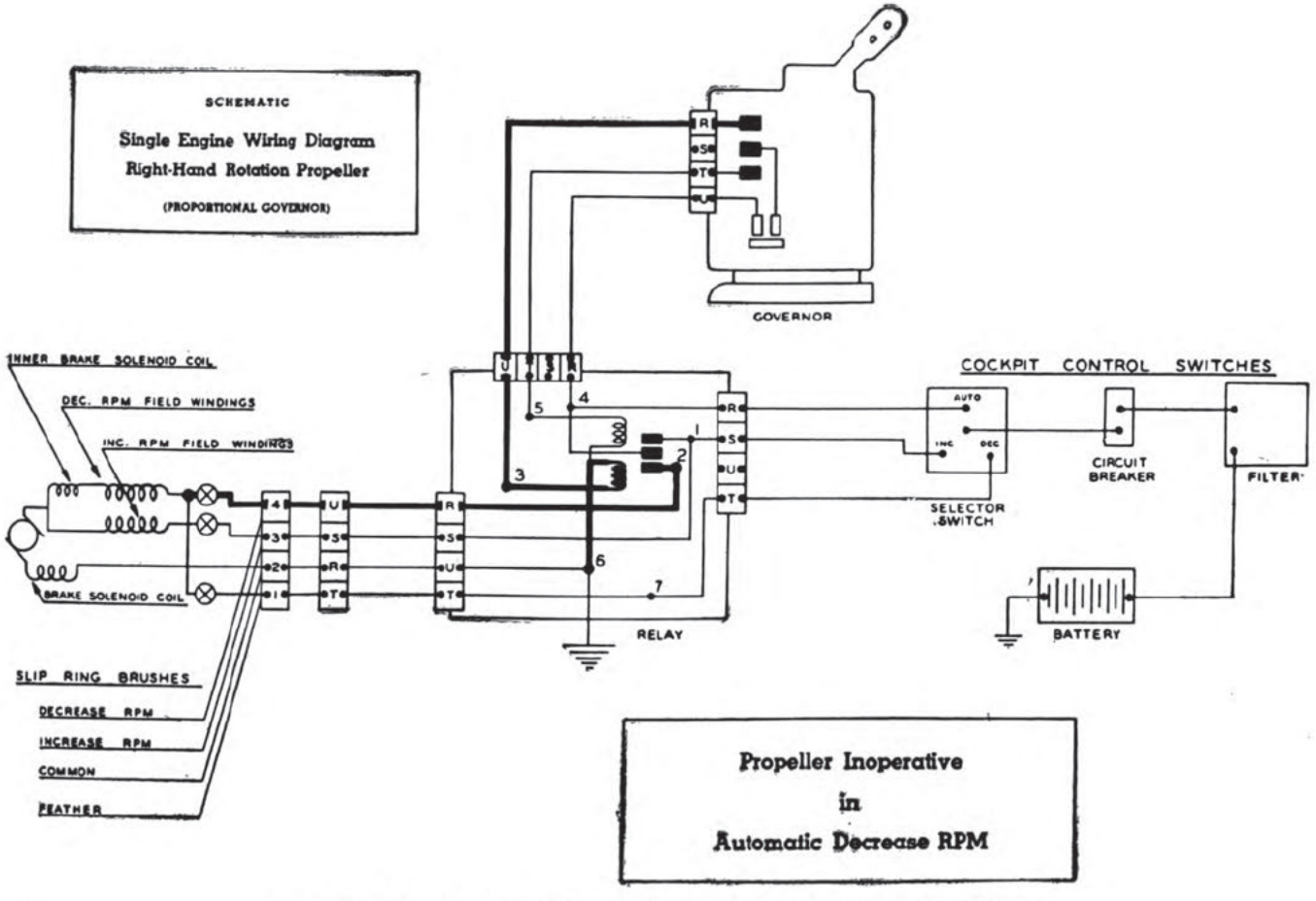

Figure 72.—Propeller inoperative in automatic decrease RPM.

TROUBLE	PROBABLE CAUSE	REMEDY
Propeller inoperative in automatic constant speed decrease rpm circuit. All other circuits operate, including increase rpm circuit of the automatic constant speed control. (See fig. 72.)	(2) If power unit fails to operate, the cause is:	
	(a) Open circuit between decrease rpm limit switch contact point and terminal stud in speed reducer housing.	Check continuity, and replace entire contact point assembly if a break is found.
	(b) Open circuit in motor leads.	Check motor leads between motor terminal and power unit connector stud. Repair break or replace lead.
Propeller inoperative in both automatic constant speed control increase rpm, and in selective fixed pitch control increase rpm circuits. All other circuits operate. (See fig. 73.)	1. Test to determine cause.	Hold selector switch in "INCREASE RPM" position, and check continuity, with test light, between numbers two and three brushes at the brush block.
	a. If light fails to light, the cause is an open circuit between number three brush and number one relay terminal (number nine in plunger type relay).	Locate and repair break.

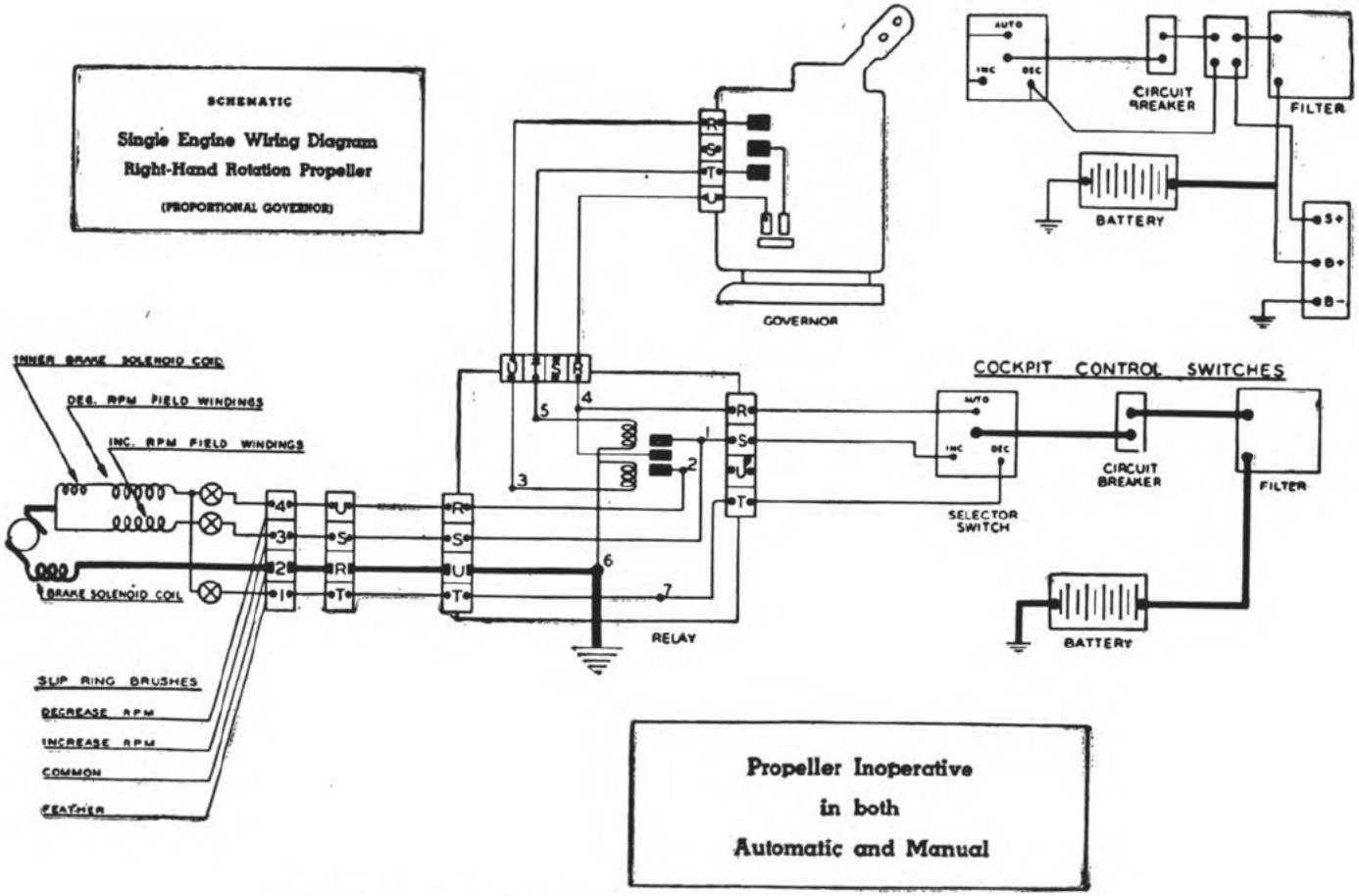

Figure 73.—Propeller inoperative in both automatic and manual.

TROUBLE	PROBABLE CAUSE	REMEDY
Propeller inoperative in both automatic constant speed control increase rpm, and in selective fixed pitch control increase rpm circuits. All other circuits operate. (See fig. 73.)	b. If light lights, the cause is an open circuit between number three slip ring and increase rpm field winding in power unit motor.	Locate trouble by removing power unit and power gear assembly on which are machined two lugs forming the fixed mechanical stop. Then energize power unit by touching the leads to the limit switch contact points. Make and break circuit at battery.
	(1) If power unit operates, the trouble is:	
	(a) Open circuit between increase rpm slip ring and hub contact point.	Check continuity between slip ring and hub contact point. Locate and repair break.
	(b) Increase rpm hub contact point and/or power unit limit switch out of adjustment.	Check tolerances and adjust to specifications.
	(2) If power unit fails to operate, the trouble may be:	
	(a) An open circuit between increase rpm limit switch contact point and terminal stud in speed reducer housing.	Check continuity, and replace entire contact point assembly if a break is found.

	(b) An open circuit in the increase rpm motor lead.	Check motor leads between motor terminal and power unit connection stud. Repair break, or replace lead.
	(c) An open circuit in the increase rpm field winding.	Check field winding for continuity, and replace motor or power unit, if necessary.
Propeller inoperative in both automatic constant speed control decrease rpm and in selective fixed pitch control decrease rpm circuits. All other circuits operate. (See fig. 74.)	1. Open circuit in the decrease rpm field windings.	Check decrease rpm field windings for continuity. Replace motor or power unit.
	2. Open circuit in the inner brake solenoid coil.	Check inner brake solenoid coil for continuity. Replace if necessary.
Propeller fails to feather. All other circuits operate. (See fig. 75.)	1. Open circuit between booster and decrease rpm terminals of the selector switch.	Place feather switch in feather position. Check for continuity from booster terminal "S+" to decrease rpm terminal of the selector switch. Locate and repair wiring, or replace feather switch.

TROUBLE	PROBABLE CAUSE	REMEDY
Propeller fails to feather. All other circuits operate. (See fig. 75.)	2. Open circuit in booster.	Check brushes, brush rigging, wiring terminals and booster field windings. Replace and repair.
	3. Open circuit between booster terminal "B+" and battery.	Check wiring from booster to battery for open circuit. Repair wiring.
Propeller feathers at normal rate of pitch change. No boosted voltage. All other circuits operate.	1. Test to determine cause.	Place feather switch to "FEATHER," and hold booster solenoid switch closed manually.
	a. If booster operates propeller at booster voltage, there is an open circuit in the booster solenoid.	Clean, repair or replace solenoid switch.
	b. If booster fails to operate, the cause is an open ground connection in the booster solenoid switch.	Tighten ground connection or replace lead, if damaged.
Radio interference.	1. Defective shielding—	
	a. Loose conduit nuts.	Tighten nuts.
	b. Break in shielding.	Repair break.
	c. Mating surfaces of brush assembly and housing corroded.	Clean mating surfaces so stray currents cannot arc.

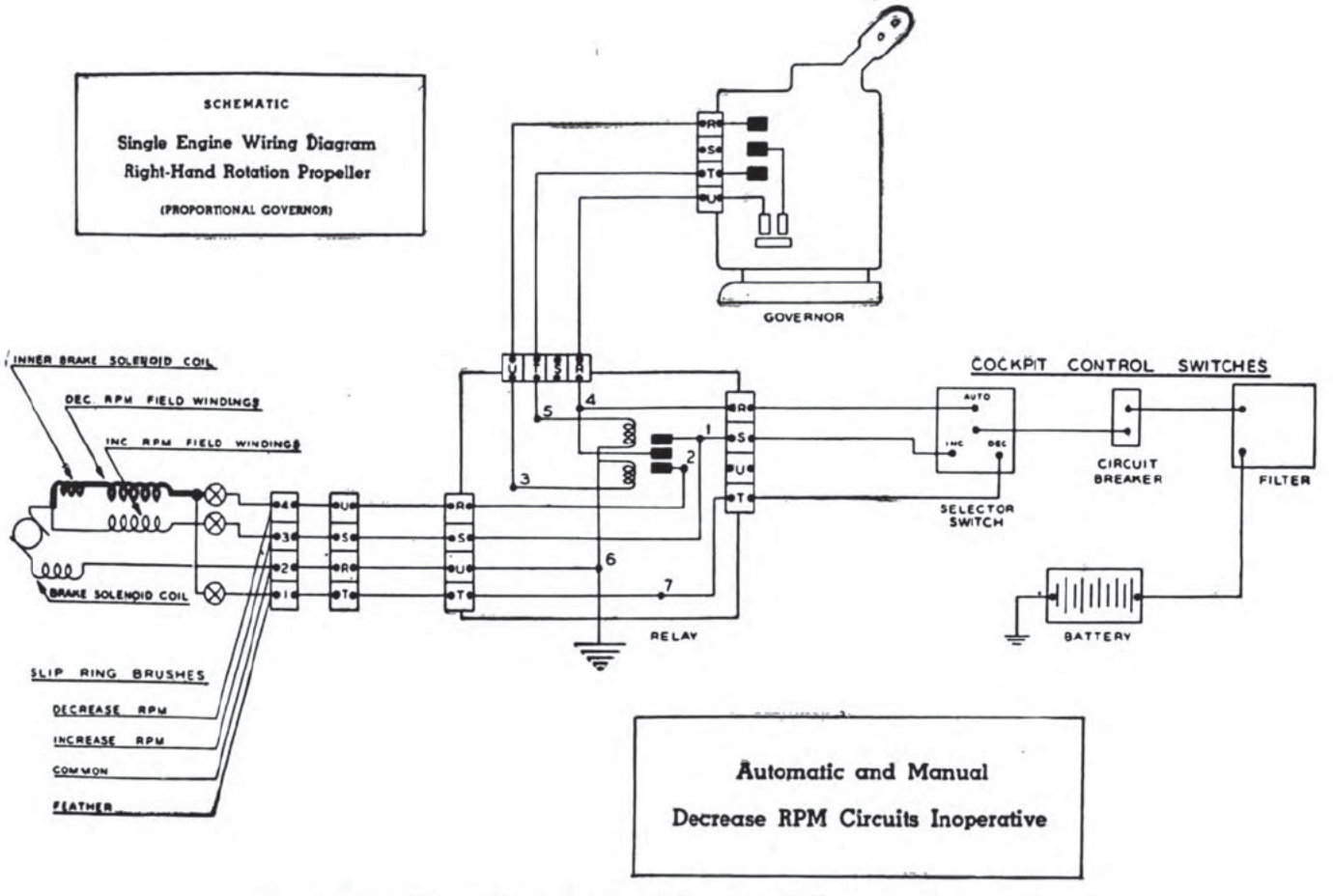

Figure 74.—Automatic and manual decrease RPM circuits inoperative.

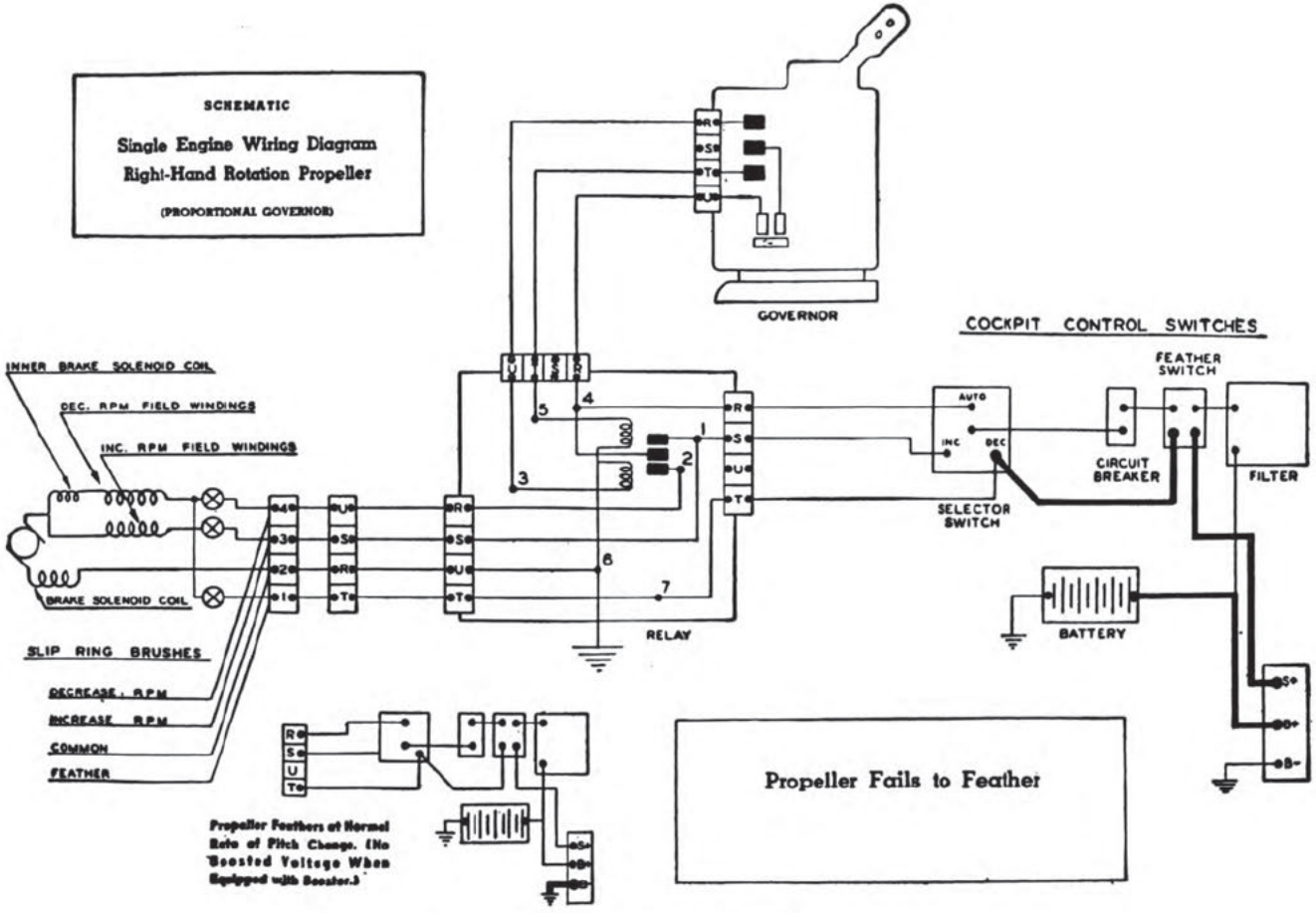

Figure 75.—Propeller fails to feather.

TROUBLE	PROBABLE CAUSE	REMEDY
Radio interference.	2. Defective filter units—	
	a. Blown condensers in relay or filter.	Check continuity and replace condensers.
	b. Relay condensers shorted.	Check continuity and replace condensers.
	c. Filter condensers shorted.	Check continuity and replace condensers.
	d. Condenser connections loose or broken.	Inspect and repair condenser connections.
	NOTE All relay and filter condensers are equipped with an integral fuse except on plunger type relay.	
	3. Defective propeller bonding circuit (at slip ring housing).	
	a. Worn bonding brushes.	Replace bonding brush assembly.
	b. Broken bonding brush connection.	Repair connections.
	4. Carbon dust in slip ring and brush block assembly.	Clean assembly with dry rag.